TECHNICAL MANUAL

OPERATOR'S MANUAL

SINCGARS GROUND COMBAT NET RADIO, ICOM

MANPACK RADIO
AN/PRC-119A (NSN 5820-01-267-9482) (EIC: L2Q)

SHORT RANGE VEHICULAR RADIO
AN/VRC-87A (NSN 5820-01-267-9480) (EIC: L22)

SHORT RANGE VEHICULAR RADIO WITH SINGLE RADIO MOUNT
AN/VRC-87C (NSN 5820-01-304-2045) (EIC: GDC)

SHORT RANGE VEHICULAR RADIO WITH DISMOUNT
AN/VRC-88A (NSN 5820-01-267-9481) (EIC: L23)

SHORT RANGE VEHICULAR RADIO WITH DISMOUNT AND SINGLE RADIO MOUNT
AN/VRC-88C (NSN 5820-01-304-2044) (EIC: GDD)

SHORT RANGE/LONG RANGE VEHICULAR RADIO
AN/VRC-89A (NSN 5820-01-267-9479) (EIC: L24)

LONG RANGE VEHICULAR RADIO
AN/VRC-90A (NSN 5820-01-268-5105) (EIC: L25)

SHORT RANGE/LONG RANGE VEHICULAR RADIO WITH DISMOUNT
AN/VRC-91A (NSN 5820-01-267-9478) (EIC: L26)

LONG RANGE/LONG RANGE VEHICULAR RADIO
AN/VRC-92A (NSN 5820-01-267-9477) (EIC: L27)

Approved for public release; distribution is unlimited.

HEADQUARTERS, DEPARTMENT OF THE ARMY

1 SEPTEMBER 1992

ELECTRICAL SHOCK

SAFETY STEPS

1. DO NOT TRY TO PULL OR GRAB THE INDIVIDUAL.
2. IF YOU CANNOT TURN OFF THE ELECTRICAL POWER, PULL, PUSH, OR LIFT THE PERSON TO SAFETY USING A DRY WOODEN POLE OR A DRY ROPE OR SOME OTHER INSULATING MATERIAL.
3. SEND FOR HELP AS SOON AS POSSIBLE.
4. AFTER THE INJURED PERSON IS FREE OF CONTACT WITH THE SOURCE OF ELECTRICAL SHOCK, MOVE THE PERSON A SHORT DISTANCE AWAY AND IMMEDIATELY START ARTIFICIAL RESUSCITATION.
5. FOR ARTIFICIAL RESPIRATION, REFER TO FM 21-11.

WARNING

RF ENERGY IS PRESENT NEAR THE ANTENNA DURING TRANSMISSION. MAINTAIN AT LEAST 30 INCHES BETWEEN VEHICULAR ANTENNA AND PERSONNEL DURING TRANSMISSIONS.

WARNING

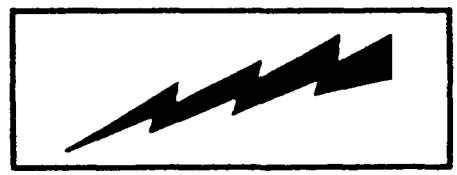

HIGH VOLTAGE

EXISTS AT CONNECTOR J1 ON VEHICULAR MOUNTING ADAPTER. AVOID PERSONAL INJURY: BE SURE J1 IS COVERED OR CAPPED WHEN NOT IN USE.

DEATH OR SERIOUS INJURY CAN RESULT:

- When antenna tip caps are not installed on antennas.
- When a tied-down antenna hits a fixed object such as an overhead bridge, tree limb, etc. Flying antenna parts might strike nearby personnel.

WARNING

- A lithium battery used with your manpack radio contains pressurized sulfur dioxide gas. The gas is toxic, and the battery MUST NOT be abused in any way which may cause the battery to rupture.
- DC NOT heat, short circuit, crush, puncture, mutilate, or disassemble batteries.
- DO NOT USE any battery which shows signs of damage, such as bulging, swelling, disfigurement, a brown liquid in the plastic wrap, a swollen plastic wrap, etc.
- DO NOT test lithium batteries for capacity.
- DO NOT recharge lithium batteries.
- DO NOT dispose of lithium batteries with ordinary trash/refuse. Turn in discharged batteries to local supply.

If the battery compartment becomes hot to the touch, if you hear hissing or burping (i.e., battery venting), or smell irritating gas (sulfur dioxide), IMMEDIATELY TURN OFF the equipment and leave the area.

1. Allow the equipment to cool at least one hour.
2. Remove and replace battery after the equipment has cooled to the touch.
3. If there is a safety incident, or if you believe a safety hazard exists, notify your local Safety Office/Officer, file a Product Quality Deficiency Report, SF Form 368, and notify the CECOM Safety Office, Ft. Monmouth, NJ at AV 995-3112.

- DO NOT use a Halon type fire extinguisher on a lithium battery fire.
- In the event of a fire near a lithium battery(ies), rapid cooling of the lithium battery(ies) is important. Flood the equipment with water, or use a carbon dioxide (CO_2) extinguisher. Control of the equipment fire, and cooling, may prevent the battery from venting and potentially exposing lithium metal. In the event that lithium metal becomes involved in fire, the use of a graphite based Class D fire extinguisher is recommended.
- DO NOT store batteries in unused equipment.
- DC NOT store lithium batteries with other hazardous materials. Keep them away from open flame or heat.

TECHNICAL MANUAL

No. 11-5820-890-10-1

HEADQUARTERS
DEPARTMENT OF THE ARMY
Washington, DC, 1 September 1992

OPERATOR'S MANUAL
RADIO SETS

MANPACK (MP)

AN/PRC-119A (NSN 5820-01-267-9482) (EIC: L2Q)

SHORT RANGE VEHICULAR RADIO (SR)

AN/VRC-87A (NSN 5820-01-267-9480) (EIC: L22)

SHORT RANGE VEHICULAR RADIO WITH SINGLE MOUNT (SR)

AN/VRC-87C (NSN 5820-01-304-2045) (EIC: GDC)

SHORT RANGE VEHICULAR RADIO WITH DISMOUNT (SR-D)

AN/VRC-88A (NSN 5820-01-267-9481) (EIC: L23)

SHORT RANGE VEHICULAR RADIO WITH DISMOUNT AND SINGLE MOUNT (SR-D)

AN/VRC-88C (NSN 5820-01-304-2044) (EIC: GDD)

SHORT RANGE/LONG RANGE VEHICULAR RADIO (SR/LR)

AN/VRC-89A (NSN 5820-01-267-9479) (EIC: L24)

LONG RANGE VEHICULAR RADIO (LR)

AN/VRC-90A (NSN 5820-01-268-5105) (EIC: L25)

SHORT RANGE/LONG RANGE VEHICULAR RADIO WITH DISMOUNT (SR/LR-D)

AN/VRC-91A (NSN 5820-01-267-9478) (EIC: L26)

LONG RANGE/LONG RANGE VEHICULAR RADIO (LR/LR)

AN/VRC-92A (NSN 5820-01-267-9477) (EIC: L27)

• This manual supersedes TM 11-5820-890-10-1, dated 1 March 1988.

TABLE OF CONTENTS

PAGE

HOW TO USE YOUR MANUAL vii

CHAPTER 1 INTRODUCTION 1-1

Scope 1-1

Section I General Information 1-2
Maintenance Forms, Records and Reports 1-2
Consolidated Index of Army Publications and Blank Forms 1-2
Reporting Equipment Improvement Recommendations . . . 1-3
Reporting Errors and Recommending Improvements 1-3
Hand Receipt (-HR) Manuals 1-3
Security Classification and Marking 1-3

II Equipment Description 1-4
Capabilities and Features 1-4
Characteristics 1-4
Differences Between Models 1-5
Equipment Data 1-5
Performance 1-6
Location and Description of Major Components 1-7
Major Components Used With Radio Sets 1-14

III Technical Principles of Operation 1-15
Scope 1-15
General Description 1-15
Functional Description 1-15

CHAPTER 2 OPERATOR'S INSTRUCTIONS 2-1

Scope 2-1

Section I Description and Use of Operator's Controls, Indicators, and Connectors 2-1
Receiver-Transmitter 2-2
Loudspeaker-Control Unit LS-671/U 2-11
ECCM Fill Device 2-12
Mounting Adapter 2-13
Power Amplifier Mount 2-14
Power Supply Adapter 2-15

II ASSEMBLY AND PREPARATION FOR USE 2-16
Scope 2-16
Manpack Radio Assembly 2-16
installation of Primary Battery and Battery Box 2-16
Antenna 2-18
Handset 2-19
Field Pack 2-19
Vehicular Radio Assembly 2-20

Dismounting RT 2-20
Mounting RT 2-23
Cabling 2-24
Antenna 2-28
Checking and Setting Life Condition of Lithium Battery . . 2-30
Removing and Changing Hold Up Battery (HUB) 2-32
Pre-mission Check 2-32

III Single Channel Operating Procedures 2-33
Loading Frequencies 2-33
Clearing Frequencies 2-34
Loading Offset Frequencies 2-34
Clearing Offset Frequencies 2-34

IV Frequency Hopping Operating Procedures 2-35
Scope 2-35
Loading FH Data (local fill) 2-35
Clearing FH Data (local fill) 2-37
Loading COMSEC Keys (local fill) 2-38
Basic COMSEC Procedures 2-39
Pre-mission Check 2-40
Net Opening 2-41
Cold Start Net Opening 2-41
FH Update Using ERF 2-44
CUE 2-45
Late Net Entry 2-45
Passive 2-45
CUE and ERF 2-46
Jamming and Antijamming 2-47

V Operator Troubleshooting Procedures 2-51

CHAPTER 3 NCS PROCEDURES 3-1

Scope 3-1

Section I Complete Net Opening Procedures and ERF 3-1
Introduction 3-1
Local Fills 3-3
Lockout Set 3-3
Hopset 3-4
Cold Start Transmission Security Key (TSK) 3-5
Checking and Setting FH Sync Time 3-5
NCS Notes 3-8
Summary of Cold Start Net Opening Procedure 3-9

TABLE OF CONTENTS Continued

Cold Start Net Opening 3-10

II Additional NCS Procedures 3-13
FH Update Using ERF 3-13
Bringing Another Station Into the Net 3-14
Changing Hopset Identification (ID) 3-15
Monitoring FH Sync Time of Other Nets 3-16
COMSEC Key Loading (Remote Fill) 3-16
Jamming and Antijamming 3-18

III NCS Troubleshooting Procedures 3-19

CHAPTER 4 OTHER OPERATING PROCEDURES . . . . . 4 - 1

Scope 4-1

Section I Control, Receiver-Transmitter (RCU) C-11561 (C)/U 4-1
Introduction 4-1
Operator's Controls, Indicators, and Connectors 4-2
Operation 4-3
Operational Notes 4-3
Intercom (ICM) Operation 4-4
Self-Test 4-4
Cabling 4-5

II Control-Monitor (CM) 4-9
Operator's Controls, Indicators, and Connectors 4-9
Initial Set-Up and Self-Test 4-10
Setting and Changing RT Functions 4-11
Cabling 4-12

III ECCM Fill Device 4-13
Checking for Fill Data in Fill Device 4-13
Zeroing Fill Device Data 4-13
Loading Fill Device Using Another Fill Device 4-14

IV Operation with External Equipment 4-15
Checking/Setting Data Rate 4-15
Operation with External Equipment 4-16
Interconnecting Cabling Diagrams 4-16
VIC System.. 4-18
Main Junction Box 4-19
Control Box 4-19
Wire Line Adapter 4-20

V Additional Operating Procedures 4-21
Retransmit 4-21
SC to SC 4-21
FH to FH 4-22
SC to FH 4-22
ERF Relay 4-23
Operational Notes 4-24
Scanning 4-25
Battery Tray 4-26
Mounting Battery Box on Battery Tray 4-26
Checking Battery Life Condition 4-26

Section VI Operation Under Unusual Conditions 4-27
Emergency Procedures 4-27
Unusual Weather 4-30
Fording 4-30

CHAPTER 5 MAINTENANCE INSTRUCTIONS 5-1

Scope 5-1

Section I PMCS . . . . . 5 - 1
Battery Physical Condition 5-3
Battery Electrical Condition 5-3
Hold Up Battery (HUB) Electrical Condition 5-3
Receiver-Transmitter Self-Test 5-4
Transmitter 5-5
Mounting Adapter and Mounting Base (or power supply adapter and single radio mount) 5-5
Remote Operation 5-6
Control-Monitor Self-Test 5-6
Control-Monitor RT Function Control 5-7
Cables 5-8

Section II Troubleshooting Procedures 5-9
Radio 5-11
Power Source 5-11
Self-test 5-11
Sig Display During Transmit 5-12
Sidetone 5-12
Handset.. 5-13
Communication 5-13
Displays 5-14
Control-Monitor 5-14
Initial Setup and Self-Test 5-14
Input/Output Circuit 5-15
Functioning 5-15

TABLE OF CONTENTS Continued

Displays.. 5-15
RCU Self-Test and Functioning 5-15

III Operator Maintenance 5-16

Routine Checks 5-16
Antennas.. 5-16
Cables and Cable Connectors 5-16
Controls and Switches.. 5-16
Mounting and Assembly Hardware 5-16
Cleaning 5-16
Preparation and Movement 5-17
Caution/Warning Labels and Plates 5-17

APPENDIX A REFERENCES A-1
Julian Date Calendar A-2
Time Zone Map A-3
Roadmap A-4
Functional Flow Charts A-5

B COMPONENTS OF END ITEM AND BASIC ISSUE LIST B-1

C ADDITIONAL AUTHORIZATION LIST C-1

D EXPENDABLE/DURABLE SUPPLIES AND MATERIALS LIST (Not Applicable)

E NOMENCLATURE, COMMON NAMES, AND GLOSSARY E-1
Nomenclature - Cross Reference List E-1
Common Name E-1
Official Nomenclature E-1
Abbreviations E-2
Glossary E-5

INDEX Index-1

HOW TO USE YOUR MANUAL

LOCATING INFORMATION

COVER. Information that you will use most often is boxed in on the front cover as well as in the Table of Contents. The boxed in information found on the front cover is thumb-indexed with edge marks so that you may quickly refer to that information.

TABLE OF CONTENTS. Refer to the Table of Contents to find out where information can be found. The Table of Contents lists each chapter title, section heading, and main subject item. Under each chapter title, section headings are listed. Under each section heading, main subjects are listed.

INDEX. Refer to the index at the back of this manual. The information is broken down to subject matter and is alphabetically listed. Look for the subject you need to know about; then turn to the page listed.

GLOSSARY. Refer to the glossary in Appendix E in the back of this manual to find the meaning of an unfamiliar term.

ABBREVIATIONS. Refer to the list of abbreviations in Appendix E in the back of this manual to find the term associated with an unfamiliar abbreviation.

NOMENCLATURE CROSS-REFERENCE LIST. Refer to the nomenclature cross-reference list in Appendix E in the back of this manual to find common names and official nomenclature.

OPERATIONAL NOTES

OPERATOR PROCEDURES. A roadmap and functional flow charts are provided in Appendix A which offer the operator graphic aids that may be helpful in learning and recalling basic operator tasks. Operator information is printed on the yellow pages so that you mav easily refer to routine operator tasks,

PROCEDURE INSTRUCTIONS. Procedures can be found under the appropriate heading. Refer to the index to find a procedure quickly. Most procedures have instructions that are lettered a, b, c, and so on. Always begin with step a; then do the rest of the steps in order.

OPERATING DISPLAYS. Examples of display data are shown throughout your manual. The letters you see on equipment displays **must** match the examples shown. However, the numbers (0, 1, 2, 3, 4, 5, 6, 7, 8, 9) you see on your equipment displays may differ from the examples. If equipment displays do not match the examples shown, make sure you have done the procedure correctly.

SWITCH SELECTIONS. All “box” switch selections on FCTN, MODE and COMSEC switches require pull to turn.

HOW TO USE YOUR MANUAL Continued

Your manual has been pre-punched with five holes. You may use a standard three ring notebook, or purchase an Equipment Log Book (NSN 7510-00-889-3494) from your local Self Service Supply Center to place your manual in.

CHAPTER 1

INTRODUCTION

PAGE

SECTION I. General information 1-2
II. Equipment Description 1-4
III. Technical Principles of Operation 1-15

SCOPE

This chapter provides a general introduction to the SINCGARS ground ICOM operator's manual. SINCGARS is designed for secure voice and data communication and is the only anti-jam radio that is part of a total system. SINCGARS is capable of two modes of operation: single channel and frequency hopping. The introduction includes information about how to report errors, equipment problems, suggested improvements, and security information. It also contains a section that describes equipment capabilities and features, characteristics, performance, weights, and measurements as well as illustrations and text that show the location and description of major components. The technical principles of operation are detailed descriptions of operational functions of SINCGARS, and are provided only for information. For simplified operator's information, refer to Chapter 2. The following radio sets handle voice and data communications. The operator's manual gives information for the operation and maintenance of the following radio sets:

- Manpack radio (MP) , AN/PRC-119A
- Short range vehicular radio (SR), AN/VRC-87A
- Short range vehicular radio mounted in single radio mount (SR), AN/VRC-87C
- Short range vehicular radio with dismount (SR-D), AN/VRC-88A
- Short range vehicular radio mounted in single radio mount with dismount (SR-D) , AN/VRC-88C
- Short range/long range vehicular radio (SR/LR) , AN/VRC-89A
- Long range vehicular radio (LR), AN/VRC-90A
- Short range/long range vehicular radio with dismount (SR/LR-D), AN/VRC-91A
- Long range/long range vehicular radio (LR/LR), AN/VRC-92A

SECTION I. GENERAL INFORMATION

ITEM	PAGE
Maintenance Forms, Records and Reports	1-2
Consolidated Index of Army Publications and Blank Forms	1-2
Reporting Equipment Improvement Recommendations	1-3
Reporting Errors and Recommending Improvements	1-3
Hand Receipt (-HR) Manuals	1-3
Security Classification and Marking	1-3

MAINTENANCE FORMS, RECORDS AND REPORTS

Reports of Maintenance and Unsatisfactory Equipment. Department of the Army forms and procedures used for equipment maintenance will be those prescribed by DA Pam 738-750, as contained in Maintenance Management Update.

Reporting of Item end Packaging Discrepancies. Fill out and forward SF 364 (Report of Discrepancy (ROD) as prescribed in AR 735-11-2/DLAR 4140.55/SECNAVINST 4355.18/AFR 400-54/MCO 4430.3J.

Transportation Discrepancy Report (TDR) (SF 361). Fill out and forward Transportation Discrepancy Report (TDR) (SF 361) as prescribed in AR 55-38/NAVSUPINST 4610.33C/AFR 75-18/MCO P4610.19D/DLAR 4500.15.

CONSOLIDATED INDEX OF ARMY PUBLICATIONS AND BLANK FORMS

Refer to the latest issue of DA Pam 25-30 to determine whether there are new editions, changes or additional publications pertaining to the equipment.

REPORTING EQUIPMENT IMPROVEMENT RECOMMENDATIONS (EIR)

If your radio needs improvement, let us know. Send us an EIR. You, the user, are the only one who can tell us what you don't like about your equipment. Let us know why you don't like the design or performance. Put it on an SF 368 (Product Quality Deficiency Report). Mail it to: Commander, U.S. Army Communications-Electronics Command and Fort Monmouth, ATTN: AMSEL-ED-PH, Fort Monmouth, New Jersey 07703-5007. We'll send you a reply.

REPORTING ERRORS AND RECOMMENDING IMPROVEMENTS

You can help improve this manual. If you find any mistakes or if you know of a way to improve the procedures, please let us know. Mail your letter, DA Form 2028 (Recommended Changes to Publications and Blank Forms), or DA Form 2028-2 located in the back of this manual direct to: Commander, U.S. Army Communications-Electronics Command and Fort Monmouth, ATTN: AMSEL-LC-LM-LT, Fort Monmouth, NJ 07703-5007. In either case, a reply will be furnished direct to you.

HAND RECEIPT (-HR) MANUALS

This manual has a companion document with a TM number followed by '-HR" (Hand Receipt), The TM 11-5820-890-10-HR consists of preprinted hand receipts (DA Form 2062) that list end item related equipment (i.e., COEI, BII, and AAL) you must account for. As an aid to property accountability, additional -HR manuals may be requisitioned from supply channels.

SECURITY CLASSIFICATION AND MARKING

The ICOM SINCGARS ground combat net radio is designated as a Controlled Cryptographic Item (CC1). Handle in accordance with TB 380-41-5.

SECTION II. EQUIPMENT DESCRIPTION

ITEM	PAGE
Capabilities and Features	1-4
Characteristics	1-4
Differences Between Models	1-5
Equipment Data	1-5
Weights and Measurements	1-5
Performance	1-6
Location and Description of Major Components	1-7
Major Components Used With Radio Sets	1-14

CAPABILITIES AND FEATURES

SINCGARS is composed of a receiver and a transmitter. Together, the Receiver-Transmitter RT-1523(C)/U (RT) has many capabilities and features that enable you to perform your mission more effectively. The Control, Receiver-Transmitter (RCU) C-11561 (C)/U has the same audio/data characteristics, capabilities, and features as the RT.

- Single channel (SC) frequency modulation (FM) operation in VHF band (30-87.975 MHz).
- Frequency hopping (FH) mode for ECCM operation.
- Preset channels: Eight for SC mode; six for FH mode. Six COMSEC channels for SC or FH mode.
- Quick, silent, push-button digital tuning.
- Visual electronic displays: provide for quick checks and prompts.
- Self-test for fast checking of equipment condition.
- Voice and digital data communication.
- 2320 SC channels.
- Handles secure traffic without attached equipment.

CHARACTERISTICS

TRANSMITTER

- **DUTY CYCLE (MP only) (amount of receiving time versus transmitting time):** MP SINCGARS duty cycle is 9:1. With a new battery, your RT is capable of continuous transmission (handset push-to-talk continuously pressed) for at least one hour.
- **PRIMARY BATTERY LIFE (MP only): MP 18 to 20 hours at 70° F.**
- **POWER DRAIN (average amount of battery current consumed):** At average battery supply voltages 3.25 amperes, maximum (manpack), 6.2 amperes at 27.5 volts (vehicular).
- **CARRIER DEVIATION (voice):** 6.5 kHz with audio input of 1.4 to 140 millivolts.
- **MICROPHONE INPUT IMPEDANCE:** 150 ohms.
- **AUDIO INPUT (minimum):** 1.4 millivolts, normal: 0.4 millivolts, whisper (WHSP).
- **SQUELCH TRIGGER;** Squelch tone signal at 150 Hz transmitted with RT FCTN set to any operating position.

RECEIVER

- **RF (Radio Frequency) SIGNAL SENSITIVITY:** 0.35 microvolts, minimum.
- **IF (Intermediate Frequency) BANDWIDTH:** 25 kHz.
- **AUDIO OUTPUT IMPEDANCE:** 600 ohms (handset at AUD/DATA or AUD/FILL) .
- **SQUELCH:** Responds to 150 Hz tone with RT FCTN (Function) set to SQ ON (Squelch On) or LD (Load).
- **POWER DRAIN:** At average battery supply voltages, 225 milliamperes, (manpack) 0.762 amperes (SR), 1.094 amperes (SR/LR), 0.942 amperes (LR), and 1.524 amperes (LR/LR).

DIFFERENCES BETWEEN MODELS

Radio sets AN/PRC-119A and AN/VRC-87A through AN/VRC-92A and AN/VRC-87C and AN/VRC-88C use interchangeable components. Different models exist (handle or connector differences), but all components are compatible and interchangeable. Different mounting adapter versions exist, but are compatible and interchangeable (refer to page 2-13). Refer to the following table for a list of components that make up each radio set.

EQUIPMENT DATA

WEIGHTS AND MEASUREMENTS: Weights are in kilograms: measurements are in centimeters, Numbers in parentheses are equivalent pounds and inches. Weights are approximate; measurements are maximums.

Component	Length CM (IN)	Width CM (IN)	Height CM (IN)	Weight KG (LB)
Control-monitor	11.9 (4.7)	15.0 (5.9)	10.3 (4.1)	1.4 (3.1)
Battery box	23.4 (9.2)	8.5 (3.3)	12.8 (5.0)	1.1 (2.4)
Field pack	N/A	N/A	N/A	1.4 (3.1)
Manpack antenna	104.9 (41.3)	N/A	N/A	0.3 (0.7)
Mounting adapter	37.4 (14.7)	38.6 (15.2)	21.5 (8.5)	12.5 (27.6)
Mounting base (part of vehicle)	35.2 (13.9)	40.5 (15.9)	11.2 (4.4)	7.1 (15.7)
Power amplifier mount	34.6 (13.6)	14.8 (5.8)	21.8 (8.6)	5.9 (13.0)
Power amplifier	30.7 (12.1)	6.9 (2.7)	13.4 (5.3)	3.1 (6.8)
Power supply adapter	26.9 (10.6)	27.6 (10.9)	13.0 (5.1)	3.8 (8.4)
RT	25.3 (10.0)	27.1 (10.7)	8.7 (3.4)	7.0 (15.4)
Single radio mount (part of vehicle)	34.4 (13.5)	29.1 (11.5)	14.7 (5.8)	3.4 (7.5)
Vehicular antenna (part of vehicle)	273.8 (107.8)	N/A	N/A	5.5 (12.1)
RCU	25.3 (10.0)	27.1 (10.7)	8.6 (3.4)	7.0 (15.4)

EQUIPMENT DATA Continued

PERFORMANCE

NOTE

RCU audio/data performance is the same as the RT.

VOICE TRANSMISSION MAXIMUM PLANNING RANGES:

TYPE RADIO	RF SWITCH POSITION	PLANNING RANGES*
Manpack/Vehicular	LO (low) M (medium) HI (high)	200 M - 400 M 400 M - 5KM 5KM - 10KM
Vehicular Only	PA (power amplifier)	10 KM - 40 KM

DATA TRANSMISSION MAXIMUM PLANNING RANGES:

TYPE RADIO	BAUD RATE USED	RF SWITCH POSITION	PLANNING RANGES'
Manpack/Vehicular (Short Range)	600 - 4800 BPS 16,000 BPS (16 KBPS)	HI (high) HI (high)	3KM - 5KM 1 KM - 3KM
Vehicular (Long Range)	600 - 2400 BPS 4800 BPS 16,000 BPS (16 KBPS)	PA (pwr amp) PA (pwr amp) PA (pwr amp)	5 KM - 25 KM 5 KM - 22 KM 3KM - 10KM

NOTE:

Above ranges are based upon line of sight and are average for normal conditions. Range depends on location, sighting, weather, and surrounding noise level, among other factors. Use of OE-254 antenna will increase ranges for both voice and data transmissions. Enemy jamming and mutual interference conditions will degrade these ranges. In data transmissions, use of lower baud rate will increase range.

- **OPERATING VOLTAGE:** Manpack: 13.5 volts from primary battery.
  Vehicular: 27.5 volts from vehicular battery.
- **FREQUENCY RANGE:** 30 MHz to 87.975 MHz.
- **NUMBER OF OPERATING FREQUENCIES: 2320.**
- **CHANNEL SPACING:** 25 kHz.
- **FREQUENCY STABILITY:** Plus or minus 5 parts per million.
- **FREQUENCY OFFSET ABILITY (SC):** Plus or minus 5 and 10 kHz.
- **TYPE OF MODULATION:** FM.
- **AUDIO RESPONSE CAPABILITY:** 300-3000 Hz.
- **TYPES OF OPERATION:** Push-to-talk (PTT) and release to receive.
  Retransmit: automatic.
  Remote: push-to-talk, release to receive.
  Data: automatic via data device.
- **MODES OF OPERATION:** Voice: SC and FH.
  Retransmit: SC to SC, SC to FH, FH to FH.
  Digital data: SC, FH.
  Remote: With AN/GRA-39, CM, or RCU.
  Plain-text or cipher text.
- **TUNING:** Electronic. SC frequency entered manually by using keyboard. Up to eight SC channels and six FH channels can be loaded and later selected using CHAN (channel) switch.

LOCATION AND DESCRIPTION OF MAJOR COMPONENTS

MANPACK RADIO

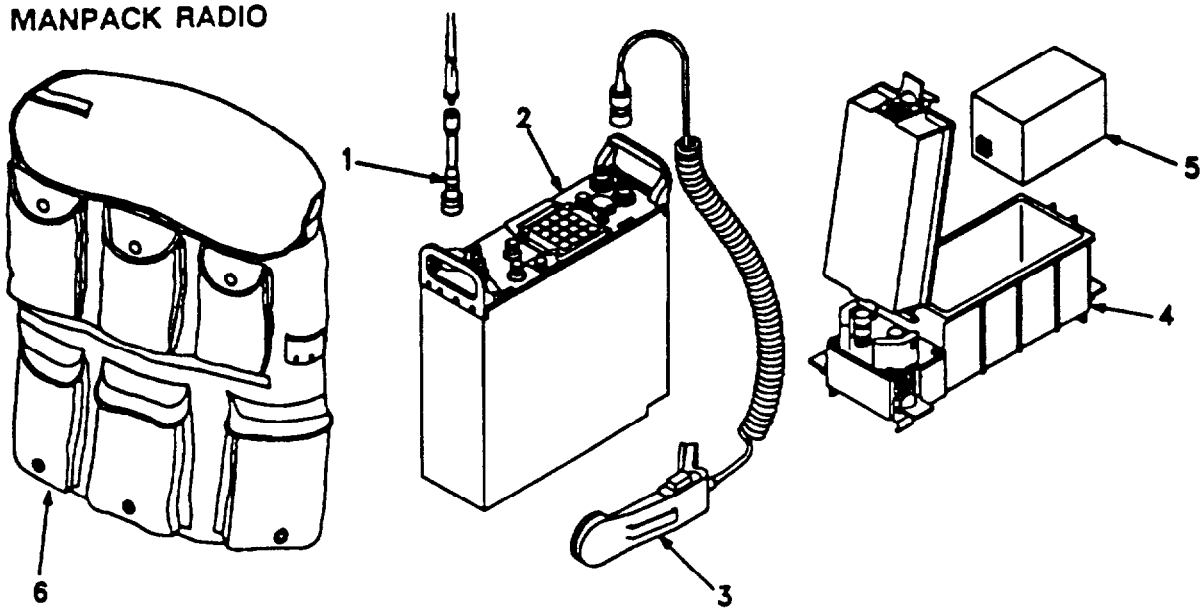

Manpack (MP) (AN/PRC-119A)

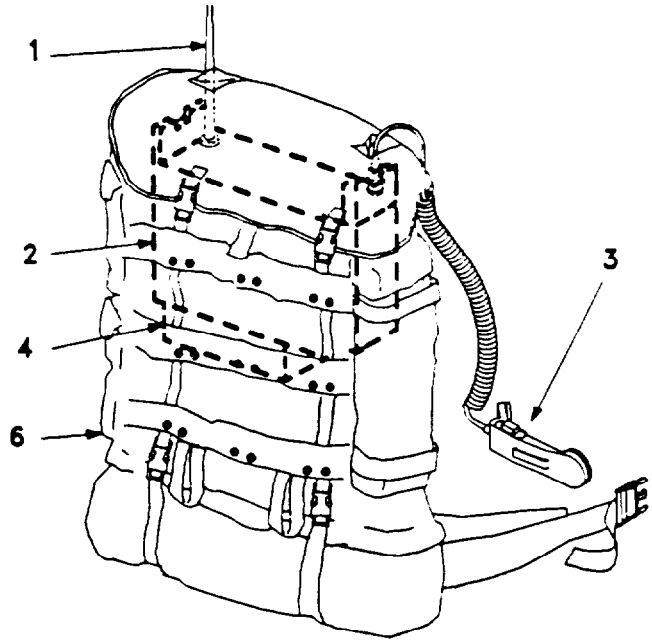

Assembled Manpack (MP) (AN/PRC-119A)

MANPACK ANTENNA: Radiates/receives RF signals for RT.

1. **RECEIVER-TRANSMITTER:** VHF-FM combat net radio. Provides primary means
2. of command and control (voice and digital data).
3. **HANDSET:** Used for voice communication.
4. **BATTERY** BOX: Connects to RT. Protects battery.
5. **BATTERY:** Connects to battery box which is connected to RT for MP power. Supplies primary power for operation.
6. **FIELD PACK:** Carries components required for MP. Fieldpacks may differ. Two types are illustrated above.

LOCATION AND DESCRIPTION OF MAJOR COMPONENTS

VEHICULAR RADIOS

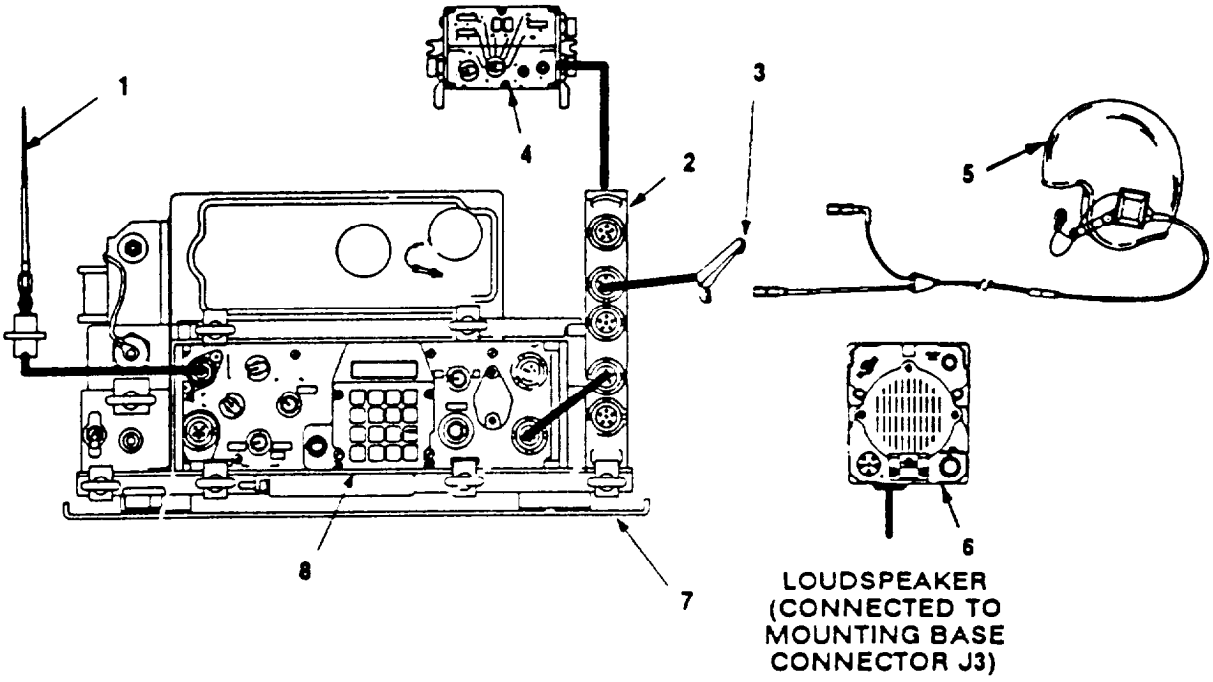

SHORT RANGE (SR)
Mounted in Mounting Adapter (AN/VRC-87A or AN/VRC-88A)

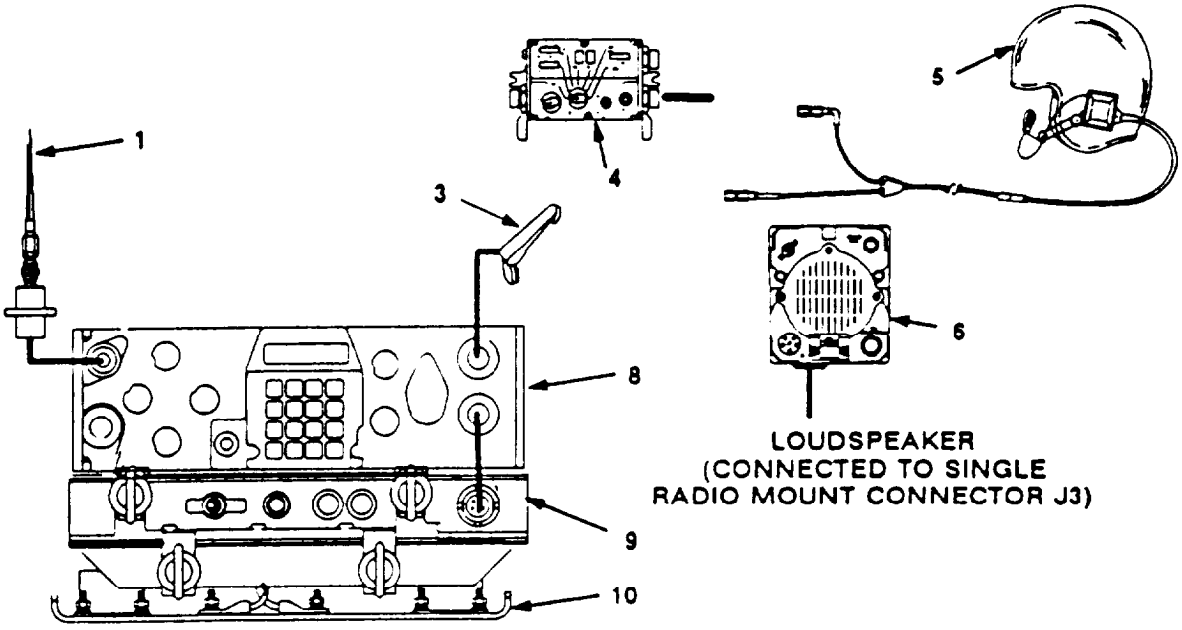

SHORT RANGE (SR)
Mounted in Power Supply Adapter (AN/VRC-87C or ANIVRC-88C)

1. **VEHICULAR ANTENNA:** Radiates/receives RF signals for RT. Mounted on vehicle, (AS-3900 or AS-3916, part of installation kit).

2. **MOUNTING ADAPTER:** Provides interface and support to RT and power amplifier (in LR radios), Mounts in mounting base.

3. **HANDSET:** Used for voice communication. Connects to amplifier adapter connector AUD/DATA A J3 (when RT is mounted in an amplifier adapter) or to RT connector AUD/FILL (when RT is mounted in a power supply adapter). When using a headset, connect to amplifier adapter connector AUD/DATA A J3.

4. **CONTROL-MONITOR (CM)** (if used): Connects to mounting adapter connector J9. Connects to power supply adapter connector J3. Used to remotely control RT (one CM can control up to three RTs).

5. **CVC HELMET:** Used for voice communication. Connects to C-2298/VRC (control box) connectors J802 and J803 (the control box is connected to AM-1780/VRC connector J507, and the AM-1780/VRC is connected to mounting base connectors J3 and J4).

6. **LOUDSPEAKER:** Loudspeaker-Control Unit, LS-671/U (loudspeaker) monitors RT audio/voice communication. Connects to mounting base connector J3 (for RT in position A) or to mounting base connector J4 (for RT in position B). Loudspeaker LS-454/U may also be used. Connects to mounting adapter connector J6.

7. **MOUNTING BASE:** Supports mounting adapter. Bolted to vehicle.

8. **RECEIVER-TRANSMITTER (RT):** Slides into mounting adapter or power supply adapter; mates with jack at rear of adapter. RT in position A is always the bottom RT. RT in position B is the upper RT. If you have a SR/LR, the RT in position A is the LR RT and the RT in position B is the SR RT.

9. **POWER SUPPLY ADAPTER:** Provides interface and support to RT. Mounts in single radio mount.

10. **SINGLE RADIO MOUNT:** Supports/provides power to power supply adapter.

LOCATION AND DESCRIPTION OF MAJOR COMPONENTS Continued

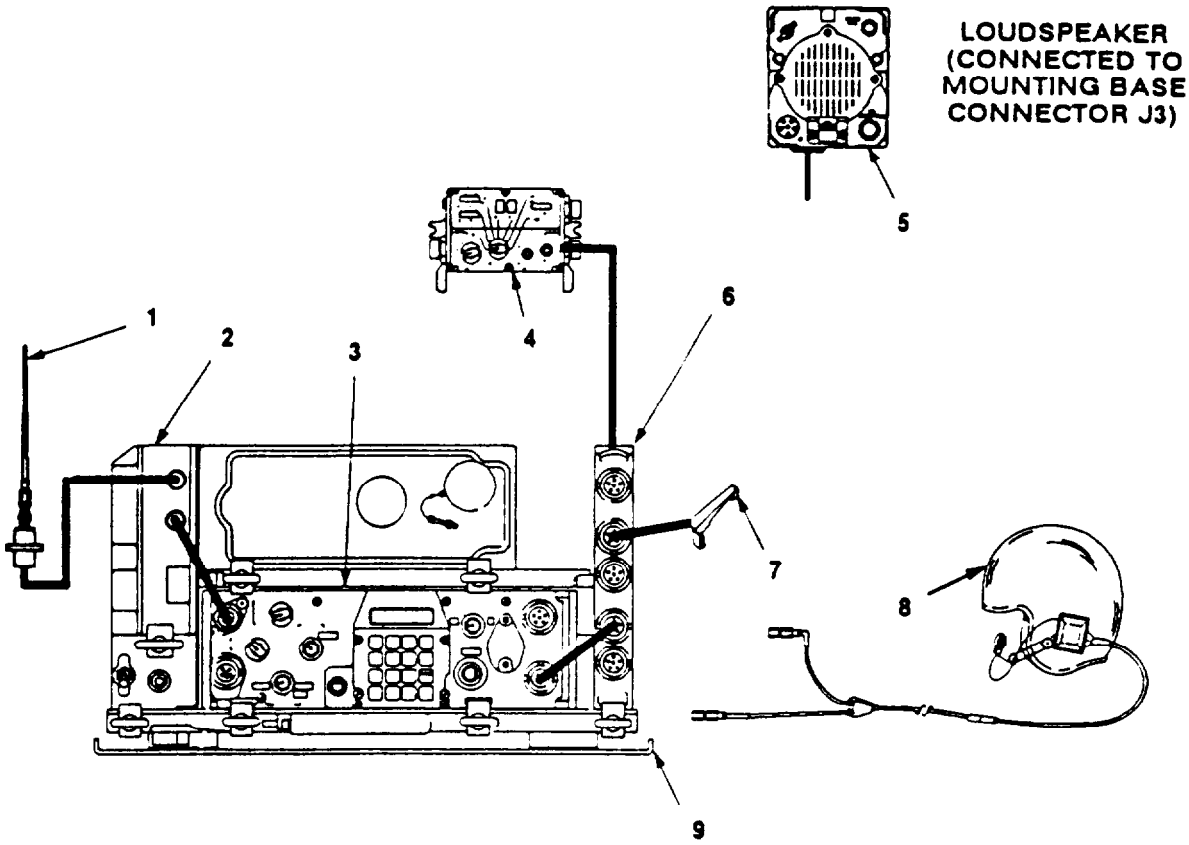

LONG RANGE (LR)
Mounted in Mounting Adapter (AN/VRC-90A)

1, **VEHICULAR ANTENNA:** Radiates/receives RF signals for RT. Mounted on vehicle. (AS-3900 or AS-3916, part of installation kit.)

2. **POWER AMPLIFIER:** Provides 50 watts of RF power during transmit. Slides into mounting adapter: mates with jack at rear of adapter. A second unit is used for LR/LR and is mounted in a separate mounting base.

3. **RECEIVER-TRANSMITTER (RT):** Slides into mounting adapter or power supply adapter: mates with jack at rear of adapter. RT in position A is always the bottom RT. RT in position B is the upper RT. If you have a SR/LR, the RT in position A is the LR RT and the RT in position B is the SR RT.

4. **CONTROL-MONITOR (CM) (if used):** Connects to mounting adapter connector J9 or to power supply adapter connector J3. Used to remotely control RT (one CM can control up to three RTs). (Part of installation kit.)

5. **LOUDSPEAKER:** Loudspeaker-Control Unit, LS-671/U (loudspeaker) monitors RT voice/audio communication. Connects to mounting base connector J3 (for RT in position A) or to mounting base connector J4 (for RT in position B). Loudspeaker LS-454/U may be used. Connects to mounting adapter connector J6.

6. **MOUNTING ADAPTER:** Provides interface and support to RT and power amplifier (in LR radios), Mounts in mounting base.

7. **HANDSET:** Used for voice communication. Connects to amplifier adapter connector AUD/DATA A J3 (when RT is mounted in an amplifier adapter) or to RT connector AUD/FILL (when RT is mounted in a power supply adapter). When us ing a headset, connect to amplifier adapter connector AUD/DATA A J3.

8. **CVC HELMET:** Used for voice communication. Connects to C-2298/VRC (control box) connectors J802 and J803 (the control box is connected to AM/1780/VRC connector J507, and the AM-1780/VRC is connected to mounting base connectors J3 and J4).

9. **MOUNTING BASE:** Supports mounting adapter. Bolted to vehicle.

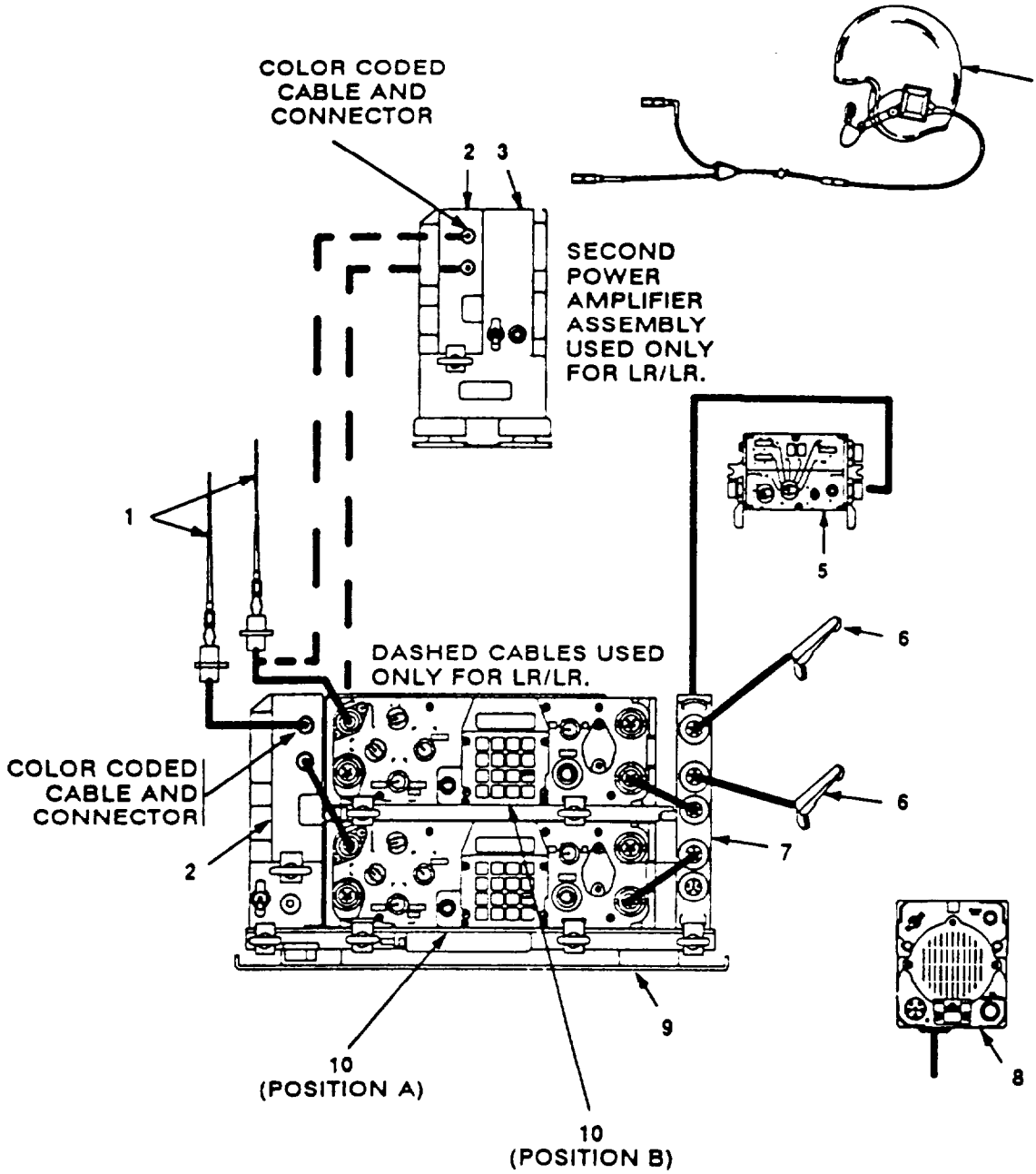

LONG RANGE/SHORT RANGE (LR/SR) (AN/VRC-89A OR AN/VRC-91A);
LONG RANGE/LONG RANGE (LR/LR) (AN/VRC-92A)

1. **VEHICULAR ANTENNA:** Radiates/receives RF signals for RT. Mounted on vehicle. (AS-3900 or AS-3916, part of installation kit.)

2. **POWER AMPLIFIER:** Provides 50 watts of RF power during transmit. Slides into mounting adapter: mates with jack at rear of adapter. A second unit is used for LR/LR and is mounted in a separate mounting base.

3. **POWER AMPLIFIER MOUNT:** Provides control interface and support to second power amplifier.

4. **CVC HELMET:** Used for voice communication. Connects to C-2298/VRC (control box) connectors J802 and J803 (the control box is connected to AM/1780/VRC connector J507, and the AM-1780VRC is connected to mounting base connectors J3 and J4).

5. **CONTROL-MONITOR (CM) (if used):** Connects to mounting adapter connector J9 or to power supply adapter connector J3. Used to remotely control RT (one CM can control up to three RTs). (Part of installation kit.)

6. **HANDSET:** Used for voice communication. Connects to amplifier adapter connector AUD/DATA A J3 (when RT is mounted in an amplifier adapter) or to RT connector AUD/FILL (when RT is mounted in a power supply adapter). When using a headset, connect to amplifier adapter connector AUD/DATA A J3.

7. **MOUNTING ADAPTER:** Provides interface and support to RT and power amplifier (in LR radios). Mounts in mounting base.

8. **LOUDSPEAKER:** Loudspeaker-Control Unit, LS-671/U (loudspeaker) monitors RT voice/audio communication. Connects to mounting base connector J3 (for RT in position A) or to mounting base connector J4 (for RT in position B) . Loudspeaker LS-454/U may be used. Connects to mounting adapter connector J6.

9. **MOUNTING BASE:** Supports mounting adapter. Bolted to vehicle.

10. **RECEIVER-TRANSMITTER:** Slides into mounting adapter or power supply adapter: mates with jack at rear of adapter. RT in position A is always the bottom RT. RT in position B is always the upper RT. If you have a SR/LR, the RT in position A is the LR RT and the RT in position B is the SR RT.

MAJOR COMPONENTS USED WITH RADIO SETS

NOTE

The mounting bases and vehicular antennas are part of the vehicle. See Appendix B and C for detailed listings. If you have an LR vehicular radio with a single radio mount, you will also require a power amplifier and power amplifier mount.

Component	Radio						
	MP	SR	SR-D	SR/LR	LR	SR/LR-D	LR/LR
Field pack	•		•			•	
Battery box	•		•			•	
CM		•*	•*	•*	•*	•*	•*
Loudspeaker		•	•	• (two)	•	• (two)	• (two)
Manpack antenna	•		•			•	
Mounting adapter		•	•	•	•	•	•
Mounting base		•	•	•	•	•	•
Single radio mount		•	•				
Power amplifier mount							•
Power amplifier				•	•	•	• (two)
Power supply adapter		•	•		•		
RT	•	•	•	• (two)	•	• (two)	• (two)
Vehicular antenna		•	•	• (two)	•	• (two)	• (two)
RCU	•*	•*	•*	•*	•*	•*	•*

*Indicates the component is optional.

SECTION III. TECHNICAL PRINCIPLES OF OPERATION

ITEM PAGE

Scope 1-15
General Description 1-15
Functional Description 1-15

SCOPE

This section describes the various configurations of SINCGARS radio equipment. It lists the types of data you need to perform SC and FH operations and in which channel it must be loaded. It also describes why particular data is needed.

GENERAL DESCRIPTION

The MP, SR, SR-D, SR/LR, SR/LR-D, LR, and LR/LR (AN/PRC-119A and AN/VRC-87A, 87C, 88A, 88C, 89A, 90A, 91A, and 92A) are radios in a family of VHF-FM combat net radios designed to provide the primary means of command and control (voice and digital data) for combat, combat service, and combat service support units.The radios are designed to achieve commonality among the various configurations. A common receiver-transmitter (RT) is used in the manpack and in all vehicular configurations.

FUNCTIONAL DESCRIPTION

Your SINCGARS radio is capable of two modes of operation: Single channel (SC) and frequency hopping (FH).

SINGLE CHANNEL: When using the SC mode of operation, the RT communicates on one frequency (selected using RT keyboard) that has been loaded into the RT. The SC frequency can be cleared or offset as desired.

FREQUENCY HOPPING: SINCGARS also has the ability to secure transmissions through the use of a transmission security key and frequency hopping to reduce or eliminate the threat of jamming and direction-finding equipment. In order for your RT to use the FH mode of operation, it must be loaded with FH data. The data necessary for FH operation are (1) cold start TSK, (2) SC frequency loaded into MAN channel, (3) hopset((4) lockout set(s), if required, and (5) FH sync time.

1. **Cold Start TSK.** Cold start TSK is the transmission security key (TSK), which, when combined with proper switch settings will result in 'COLD' display. This means that the radio is ready for a cold start net opening. To make the display show "COLD", four things must occur: (1) MODE switch set to FH or FH-M (2) cold start TSK loaded, (3) CHAN set to MAN, and (4) MAN frequency loaded. The cold start TSK is a variable which determines the sequence in which the RT hops during FH operation.

FUNCTIONAL DESCRIPTION Continued

2. **SC frequency loaded Into MAN channel.** When preparing for a cold start net opening, the net communicates using the SC frequency loaded into the MAN channel.
3. **Hopset.** The hopset is the set of frequencies that the RT hops on (changes frequency) during FH. The radio hops on more than 100 frequencies per second.
4. **Lockout set.** A lockout set is a series of frequencies that are not used during FH operation. When a lockout set is loaded into the RT, the frequencies that are contained in the lockout set are no longer part of the hopping pattern. It may not be necessary to load a lockout set (check SOI). However, if one is required, it MUST be loaded into the RT prior to loading the hopset. Otherwise, the keyboard display will show " L7", " L8", or both. This means that your RT is missing mandatory lockout sets.
5. **FH sync time.** This is needed to synchronize FH communications. FH sync time is loaded by transmission from the net control station radio during ERF. It can also be loaded into the RT by keyboard actions. During cold start net opening, the member radios receive FH sync time at the same time that the ERF is received.

CUE FREQUENCY: This is a single channel frequency. It is loaded into the CUE channel by keyboard actions. It enables someone not in a FH radio net to "CUE", or contact, the FH net. When CHAN is set to CUE, MODE to SC, and handset push-to-talk is pressed, 'CUE" is displayed at NCS or designated RT display. The CUE frequency is listed in the SOI. Only the NCS, alternate NCS, and designated members should load the CUE frequency.

LOADING FH DATA: Two methods can be used for loading FH data. One is called "local fill"; the other, "electronic remote fill (ERF)." Both load the data first into the RT holding memory; the holding memory is a temporary memory, so the data must be moved to the RT permanent memory. It is stored in the permanent memory. Both make use of the RT keyboard. When a button is pressed, the display responds. It shows what has been done. It also shows when another keyboard entry is needed. An underline (-) on display means another entry is needed.

LOCAL FILL OF FH DATA: Local fill makes use of an ECCM fill device or a tape reader. There is little difference between lockout set and hopset loading. When a hopset is being loaded and ST0 is pressed, the display shows "STO-". The line on the display means another keyboard entry is needed. The operator must press a number button (1-6) to indicate in which channel the hopset is to be stored. The line on display then changes to the channel number. The hopset is then in the permanent memory.

ERF (ELECTRONIC REMOTE FILL): ERF does not make use of a fill device. Instead, the net control station (NCS) transmits lockout sets and/or hopsets to net member radios. There is little difference between a hopset ERF, and a lockout set ERF. When the NCS sends a hopset, the following are sent at the same time: FH sync time, TSK, hopset, and hopset ID.

COMSEC KEYS (Traffic Encryption Key and Key Encryption Key): These are variables needed for cipher text (CT) operation. A Traffic Encryption Key (TEK) may be loaded into channels 1 thru 5. A Key Encryption Key (KEK) is only loaded into channel 6. A KEK must be loaded into an RT before remote fill of a COMSEC key is possible. It is possible to scroll TEK. KEK's cannot be scrolled.

LOCAL FILL OF COMSEC KEYS: A COMSEC key is required for CT operation and is loaded into the RT using a COMSEC fill device. Refer to page 2-38 for local COMSEC key loading information.

REMOTE FILL OF COMSEC KEYS: A COMSEC key is required for CT operation. The NCS may send or ERF a COMSEC key to a member RT provided a COMSEC key is already present in channel 6 (locally loaded). Refer to page 3-16 for remote COMSEC key loading information.

COMMUNICATING IN AN FH NET: An FH radio net must be opened by the NCS. This synchronizes the net radios; then normal radio procedures are used for communicating. The procedure used to open a net is called cold start net opening.

OTHER FH OPERATIONS: These include updating FH data by ERF, passive late net entry, and CUE and ERF late net entry. Late entry is used when you are out of the net for any reason. CUE is used for contacting a FH radio net when you are not an active member. CUE is also used if you missed your primary net's opening, or when requesting entry into an alternate net. CUE may be used if you are operating a SC radio and wish to contact a FH net.

MAINTAINING RADIO'S MEMORY: Memory, or COMSEC and FH fills plus SC frequencies, is maintained in two ways. Main power, either battery or vehicular system, allows radio to retain all memory so long as main power is applied. A hold up battery (HUB) serves as back up for memory retention. HUB power cuts in automatically if main power is disrupted for any reason, and the HUB becomes operational whenever the FCTN switch is set to [STBY]

CLEARING MEMORY: There are four ways data may be cleared from the radio. SC frequencies are cleared by pressing FREQ and then CLR. COMSEC fill is cleared by setting the COMSEC switch to position [Z] and waiting for five seconds. FH data is cleared by setting the FCTN switch to position [Z-FH] and waiting for five seconds. Also, all memory is cleared by setting the FCTN switch to [OFF] and waiting five seconds.

NOTE

When your radio has a good HUB installed, setting FCTN to [STBY] causes no loss of memory.

THIS PAGE WAS LEFT BLANK INTENTIONALLY

CHAPTER 2
OPERATOR'S INSTRUCTIONS

		PAGE
SECTION I.	Description and Use of Operator's Controls, Indicators, and Connectors	2-1
II.	Assembly and Preparation for Use	2-16
III.	Single Channel Operating Procedures	2-33
IV.	Frequency Hopping Operating Procedures	2-35
V.	Operator Troubleshooting	2-51

SCOPE

Chapter 2 is designed for the SINCGARS operator. It contains information that the operator needs to know, except maintenance and special operations which are covered in other chapters. This chapter describes how to use the radio's controls and how to prepare the radio for operation. It also contains operator's procedures for single channel and frequency hopping operation, loading data and receiving an ERF for net opening. Although the SINCGARS radio demands more of the operator than merely turning it on, operator tasks primarily involve entering data using the keyboard, using local fill devices, and responding to NCS messages. Once these steps have been taken, the SINCGARS radio requires little of the operator other than listen and push-to-talk. The Operator's Roadmap and Functional Flow Charts in Appendix A offer the operator graphic aids which may be helpful in learning and recalling basic operator tasks.

SECTION I. DESCRIPTION AND USE OF OPERATOR'S CONTROLS, INDICATORS, AND CONNECTORS

ITEM	PAGE
Receiver-Transmitter (RT)	2-2
Loudspeaker-Control Unit, LS-671/U (loudspeaker)	2-11
ECCM Fill Device	2-12
Mounting Adapter	2-13
Power Amplifier Mount	2-14
Power Supply Adapter	2-15

Section I describes each applicable control (knob, switch, etc.) and connector for the RT, loudspeaker, ECCM fill device, mounting adapter, power supply adapter, and power amplifier mount. The functional descriptions and illustrations are helpful in becoming familiar with the equipment.

RECEIVER-TRANSMITTER

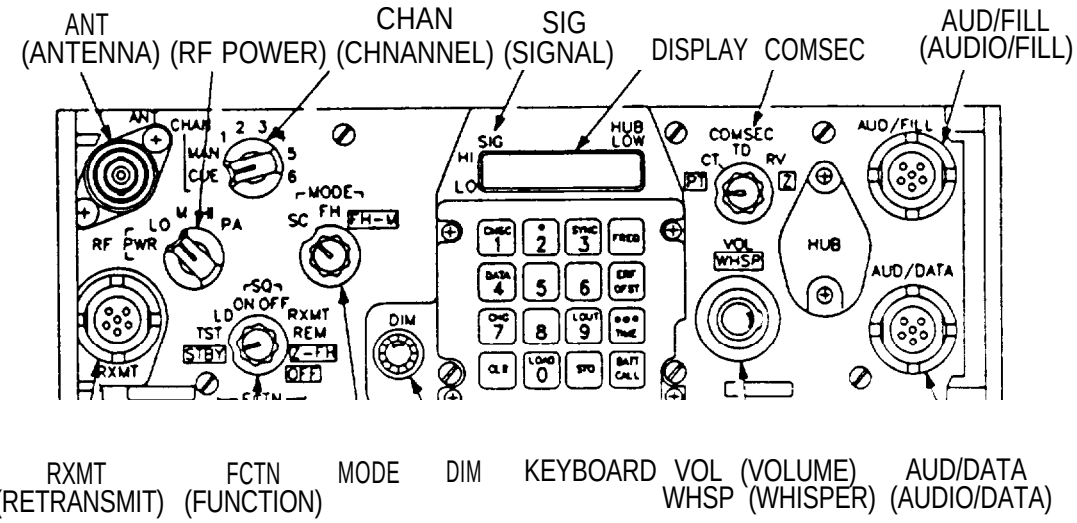

RT Front Panel

FCTN (function) switch. Sets RT function: operating positions are: SQ ON, SQ OFF, RXMT, and REM, The FCTN switch has positions which are boxed-in. You must pull knob to turn to these positions. This guards against FCTN switch accidentally being moved to these positions. Pull knob to turn to OFF , STBY and Z-FH .

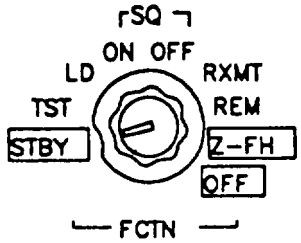

FCTN Switch

NOTE

For a complete view of RT front panel, refer to the above illustration.

• OFF	Turns off all power to the RT, including HUB. Clears all memory after five seconds. Used when radio is taken completely out of action.
•TST (test).	Starts RT self-tests. Circuits tested include ECCM, data, and RT. Displays show results.
•SQ ON (squelch on).	Turns on RT and squelch. Used for communication with similar radios. Prevents rushing noise in handset or loudspeaker.
•SQ OFF (squelch off).	Turns on RT, but not squelch. Used with single channel (SC) communications with radios having different squelch systems. May be helpful when RT is being jammed during single channel operations.
•REM (remote).	Disables RT front panel controls. Used for CM and RCU operation.
•RXMT (retransmit).	Puts RT into retransmit mode. Used for retransmit operations.

LD (load). Used for loading SC frequencies, FH data, and COMSEC key data. Used to receive ERF.

- STBY (stand by). Turns of primary power to the RT, HUB remains operational. In STBY radio draws HUB power to maintain memory (SC, COMSEC, and FH data) and maintain sync time for 24 hours. Use SQ ON rather than STBY listening silence.
- Z-FH (zero FH). When FCTN is set to this position, all FH data is cleared after five seconds. Procedure for radio out of operation calls for pausing in the Z-FH position for five seconds before going to the OFF position. This ensures that RT is completely cleared of FH data.

MODE switch. Set RT mode.

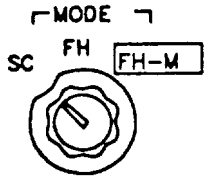

MODE Switch

NOTE

For a complete view of RT front panel, see page 2-2.

- SC (single channel). Places RT in SC mode.
- FH (frequence hopping). Places RT in FH mode.
- FH-M (frequency hopping master). Places RT in frequency hopping master mode. This position is to be used only by NCS (and alternate NCS) stations. If more than one station uses this position, net communication may be lost. **SINCGARS OPERATORS: DO NOT USE THIS POSITION!** Pull knob to select FH-M.

COMSEC switch. Sets COMSEC mode of RT.

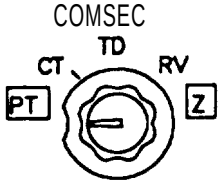

COMSEC Switch

NOTE

For a complete view of RT front panel, see page 2-2.

- PT (plain text). Places RT in plain text (not secure) mode. Pull knob to select PT.
- CT (cipher text). Places RT in secure mode.
- TD (time delay). Places RT in secure mode. Used when necessary to compensate for transmission delays due to distance between communication links.
- RV (receive variable). Used when receiving remote fill of COMSEC key.
- Z (zero) Used to clear COMSEC keys. Instantly clears channels 1 thru 5 when set to ZZ. Hold in Z position for 5 seconds to clear key in channel 6. Pull knob to select Z.

RECEIVER-TRANSMITTER Continued

CHAN (channel) switch. Selects manual, preset, and cue frequencies.

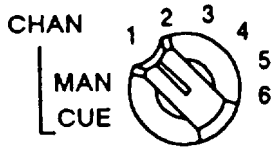

CHAN Switch

NOTE

For a complete view of RT front panel, see page 2-2.

- CUE. When loaded with the correct CUE frequency, may be used to contact an FH radio net when you are not an active member of that net. CUE may be used if you are operating in SC and wish to contact an FH net. Only unit-designated stations should load CUE frequency.
- MAN. When loaded with an SC frequency, can be used to communicate in SC and/or to perform cold start net opening.
- 1-6. Positions of CHAN switch that may be loaded with one or more of the following: SC frequency, FH data, and COMSEC key.

RF switch. Adjusts power level as listed below.

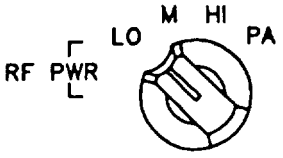

RF Switch

NOTE

For a complete view of RT front panel, see page 2-2.

Needed transmit distance (LOS) :	Set RF switch to the following position:

NOTE

For planning ranges see Chapter 1.

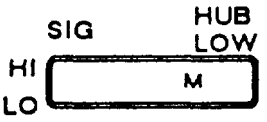

SIG (signal) display. Shows appropriate signal strength. Marker lights from low (LO) to high (HI). The higher the marker, the stronger the transmit signal. RF switch setting determines the amount of signal strength while transmitting. Some versions of the radio display an “M” to indicate that a message is being sent over the net.

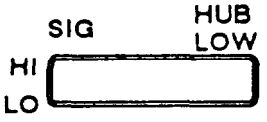

HUB/LOW (hold up battery) display. A diamond-shaped light flashes if HUB is weak (a steady light indicates that HUB is extremely weak or missing), The light will only appear if the keyboard display is active. HUB allows RT memory to retain data when power to the RT has been turned off.

DIM control. Adjusts display brightness. Turn right (clockwise) to brighten displays; turn left (counterclockwise) to dim displays. Turn full left when you are wearing night-vision goggles.

VOL/WHSP (volume/whisper) control. Adjusts audio volume. Turn clockwise to increase volume; turn counterclockwise to reduce volume. Whisper control allows you to speak softly during transmit, and to receive at a normal level. Pull knob to turn on whisper function.

Keyboard display. The keyboard display shows a variety of information for the operator. It displays SC frequencies, error messages, FH data, data rates, etc. It also responds to keyboard entries according to the operation you are performing. Specific keyboard displays are described in the applicable procedures in this chapter. Keyboard display times out (blanks) 7 seconds after keyboard entry when FCTN is set to LD, SQ ON, or SQ OFF. If you wish the display remain active, continue to press the last button and the display will not blank out. Press STO within 7 seconds of completing your entry to prevent display from going blank. If display does go blank, press FREQ to be able to re-enter numbers. Pressing FREQ after pressing STO allows you to view the frequency you have entered.

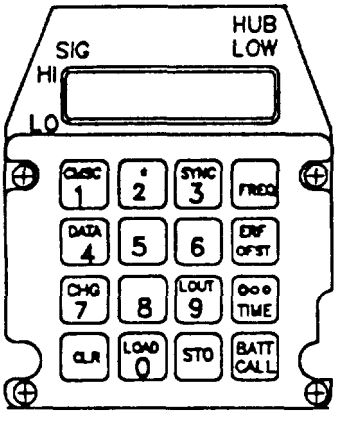

Keyboard and Keyboard Display

NOTE

For a complete view of RT front panel, see page 2-2.

RECEIVER-TRANSMITTER Continued

Keyboard: Used for entering, holding, and checking data,

• **FREQ (frequency) button.**	Used to check data in RT. Used to load and clear SC frequencies and to offset a SC frequency.
• **ERF (electronic remote fill) button.**	Used by NCS only to transmit (send) ERF to member RT's.
• **OFST (offset) button.**	Used to load and/or check SC offset frequency. OFST not used for FH operation, which is SINCGARS primary mode of operation.
• **•••/TIME button.**	Used by NCS only. Used to load and check RT FH sync time clock.
• **BATT (battery) button.**	Used to check and set battery life condition in manpack radio. When pressed, display shows remaining amount of battery life. Refer to the battery life condition diagram on page 2-31.
• **CALL (call) button.**	Used to communicate with RCU. When pressed, and FCTN is set to REM, RCU display shows "CALL" and an alarm is heard in the RCU and RT handsets.
• **ST0 (store) button.**	Used for data loading. Transfers data from RT holding memory into permanent memory. Operator presses STO to put ERF from NCS into RT permanent memory (in desired location)
• **LOAD (load) button.**	Used to load data into holding memory and to retrieve data from permanent memory into holding memory. Refer to glossary in the back of this manual for information on holding and permanent memories.

- **CLR (clear) button.** Clears data from keyboard display if an error was made during an entry or if data needs to be cleared from RT memory.

- **LOUT (lockout) button.** Used only by NCS.

- **CHG (change) button.** Used with DATA, * , OFST, or CMSC buttons to change current information to another available selection, Pressing this button with DATA, *, OFST, or CMSC will change data rate, state of l function, offset frequency, or COMSEC key.

- **SYNC (late entry) button.** Used for FH passive late net entry procedure. Pressing this button places RT in late net entry status. Pressing this button allows passive late net entry: when you hear traffic, you have re-entered the net.

- **DATA button.** Pressing this button shows the operating data rate. Pressing the CHG/7 button while data rate is displayed allows selection of data rate by scrolling through available data rates (600,1200, 2400, 4800, 16000, AD1, TF, OFF), The rate or mode remaining on the display becomes the new rate.

- **CMSC (COMSEC) button.** Pressing this button causes the COMSEC key to be displayed. The NCS and SOI will give guidance as to how and when to use this button.

- ***button.** This button controls a special feature of the radio. You will be instructed by NCS and SOI when to turn this feature on and off.

- **Number buttons.** Used to enter numerical data such as SC fre quencies, position in which data is to be stored, battery life condition, etc.

RECEIVER-TRANSMITTER Continued

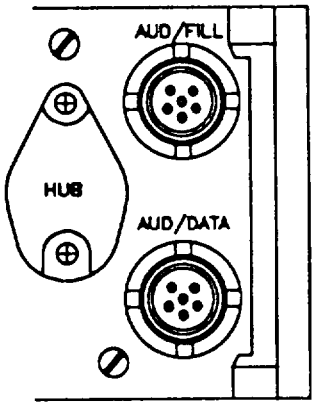

AUD/FILL and AUD/DATA Connectors (RT right front panel)

AUD/FILL (audio/fill) connector. Connects to fill device using a fill cable during FH data loading, and COMSEC key loading. May also be used to connect handset when RT is mounted in power supply adapter.

AUD/DATA (audio/data) connector. Connects to handset or mounting adapter during normal operations. During data operations, it connects to external data devices, or to mounting adapter for TACFIRE operations.

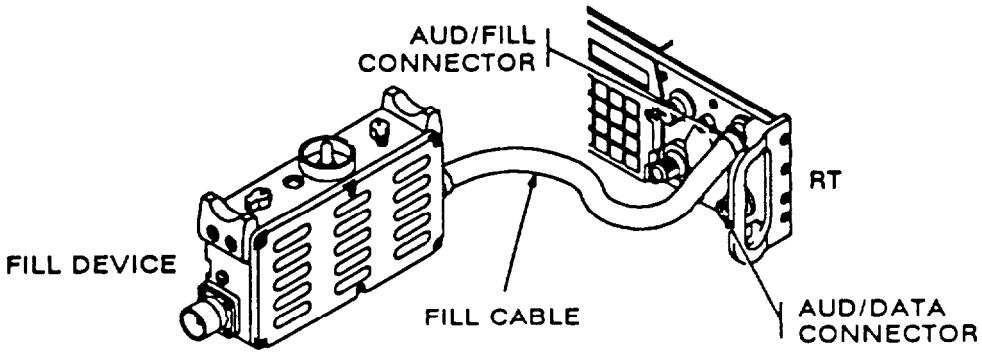

Fill Device Connected to RT AUD/FILL Connector Using Fill Cable

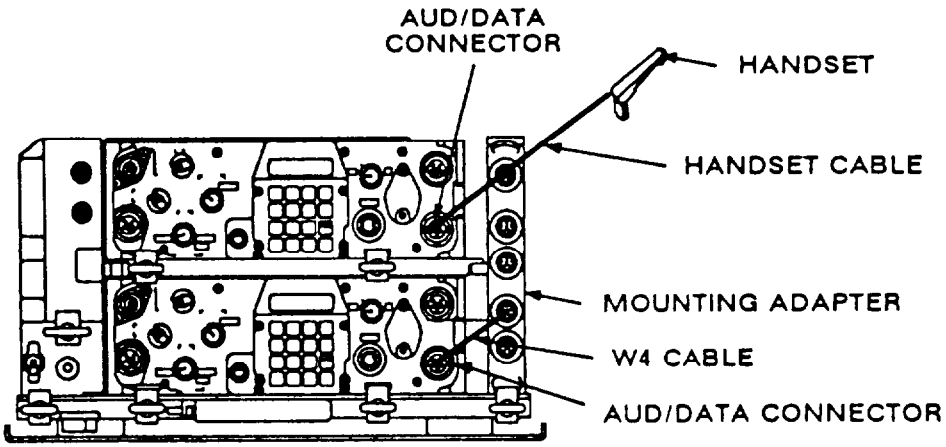

Handset Connected to RT AUD/DATA Connector;
Mounting Adapter Connected to RT AUD/DATA Connector Using W4 Cable

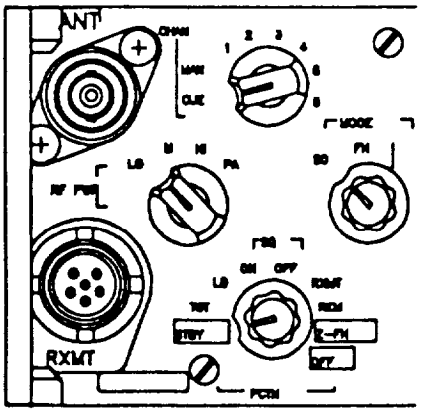

ANT and RXMT Connectors
(RT left front panel)

ANT (antenna) connector. Conects to manpack antenna. Also connects to vehicular antenna (using antenna cable) or power amplifier (using cable).

RXMT (retransmit) connector. Connects to other retransmit RT using retransmit cable.

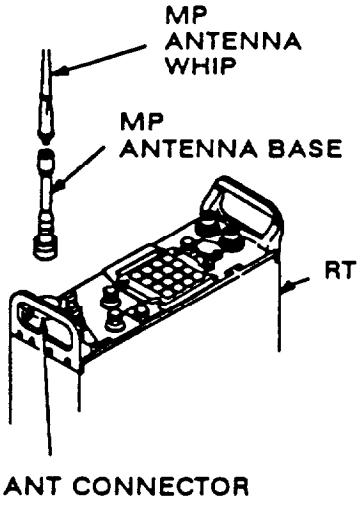

MP Antenna Connected
to RT ANT Connector

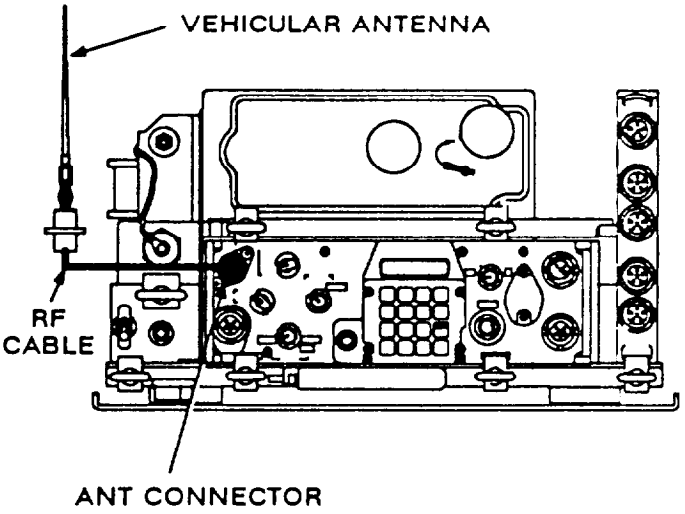

Vehicular Antenna Connected to RT
ANT Connector Using RF Cable

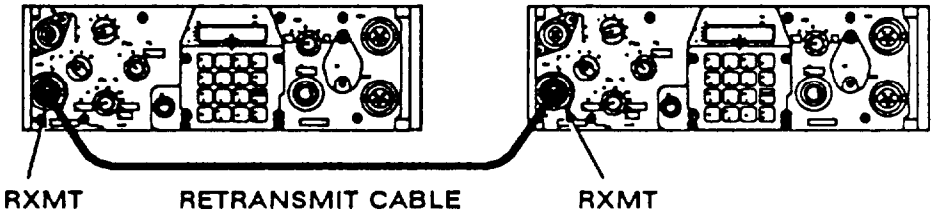

Retransmit RT Connected to Retransmit RT

RECEIVER-TRANSMITTER Continued

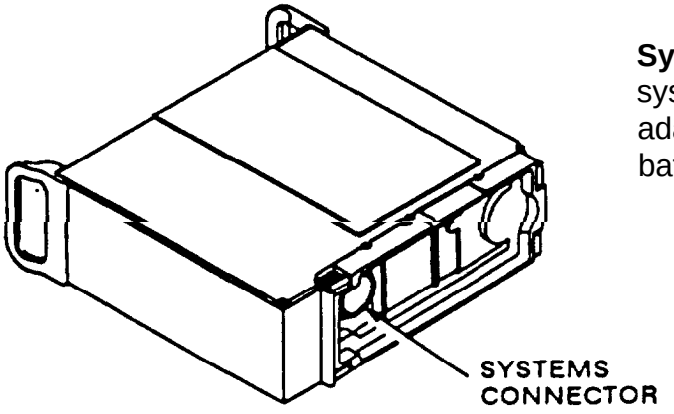

Systems Connector. Connects to systems connector on mounting adapter, power supply adapter, or battery box.

Systems Connector (RT rear view)

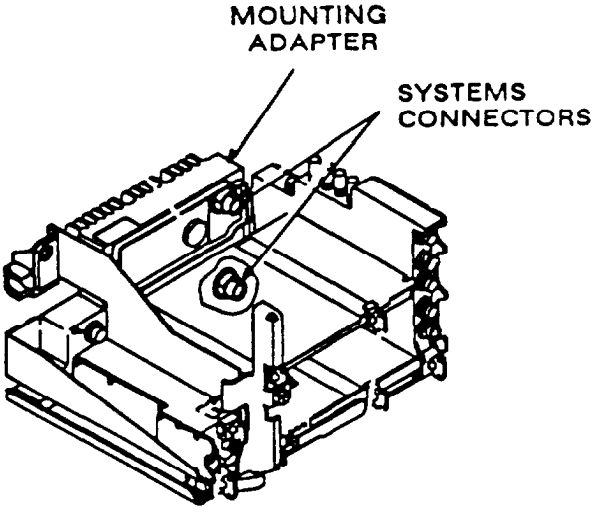

Mounting Adapter
Systems Connectors

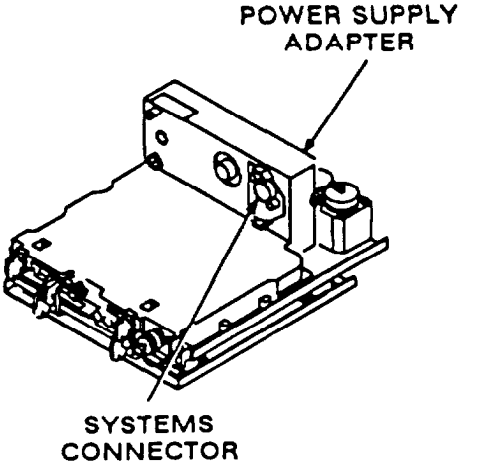

Power Supply Adapter
Systems Connector

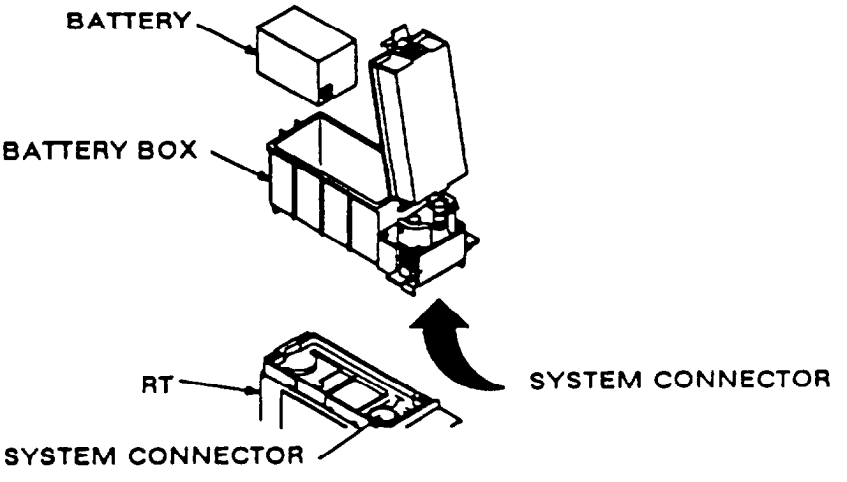

Battery Box and RT Systems Connectors

LOUDSPEAKER

Loudspeaker-Control Unit, LS-671/U (loudspeaker). Used for monitoring voice communications in vehicular installations. Refer to Chapter 1 for connection to vehicular radios.

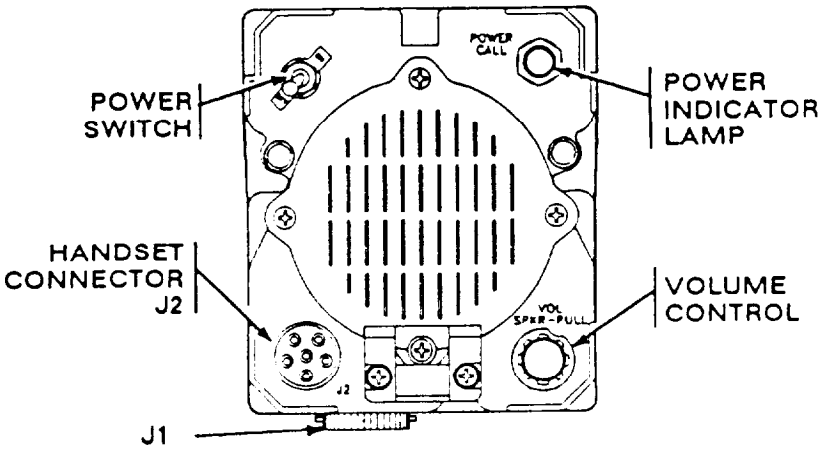

Loudspeaker

Power switch. Used to turn loudspeaker on and off. May also be used to turn power on and off to mounting adapter if mounting adapter CB1 is set to ON.

Power indicator lamp. Lights when power switch is set to ON.

Volume control. Adjusts volume level of loudspeaker or handset (if connected). To adjust volume level for handset, turn clockwise to increase volume: turn counterclockwise to decrease volume. To adjust volume level for loudspeaker, pull and turn clockwise to increase volume; pull and turn counterclockwise to decrease volume.

Handset connector J2. Used to connect handset.

J1. Connects to mounting base or single radio mount connector J3 or J4 using speaker cable.

Loudspeaker LS-454/U (loudspeaker), Used for monitoring voice communications in vehicular installations

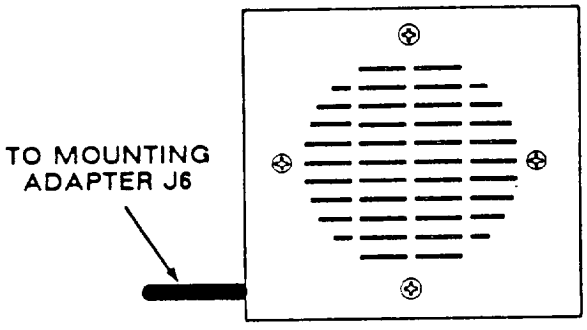

Loudspeaker

ECCM FILL DEVICE

The ECCM fill device stores FH data. You will use the fill device to locally load this data into the RT. Fill devices are generally issued on a basis of one fill device per four radios.

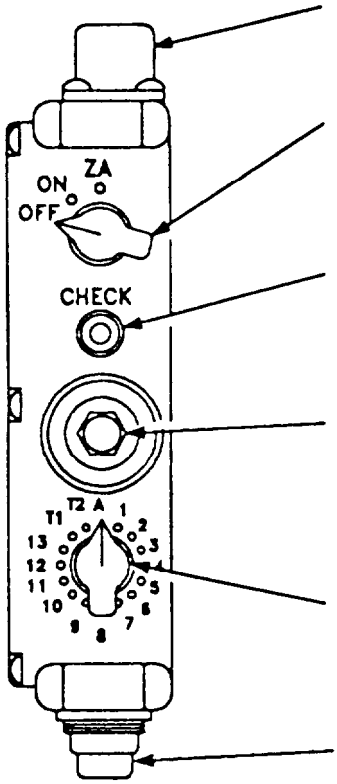

ECCM Fill Device
(top view)

P1 connector. Connects to second fill device for fill device loading.

Function switch. Turns power on and off. Spring-loaded ZA (zero all) position zeros all data in fill device when initiate switch is pressed.

Check light. Blinks when data is transferred to RT or from tape reader to fill device. Also blinks (confirms that data is present) when select switch position has data in it and initiate switch is pressed.

Initiate switch. Used (1) to "ask for" data during fill device loading: (2) to check if select switch position has data in it: (3) to zero fill device when FUNCTION switch is set to ZA.

Select switch. Selects which hopset or lockout set will be stored or transferred. "A" position is used to transfer all data from one fill device to another. Positions 1-13 are for hopsets or lockout sets. Positions T1 and T2 are not used.

J1 connector. Connects to the RT AUD/FILL connector by using a fill cable.

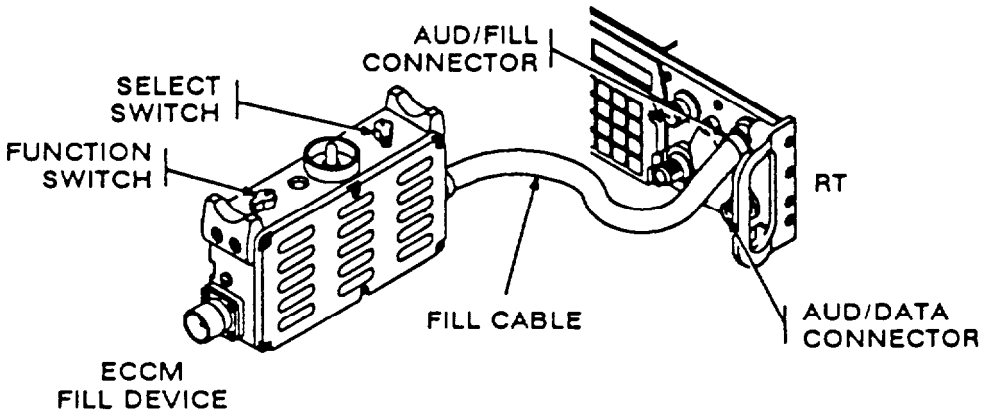

ECCM Fill Device Connected to RT AUD/FILL Connector
Using Fill Cable

MOUNTING ADAPTER

The mounting adapter sets on the mounting base. It can hold a power amplifier and one or two radios, All connectors except 3 and 16 need cables for hookup. See the cabling diagrams in this manual.

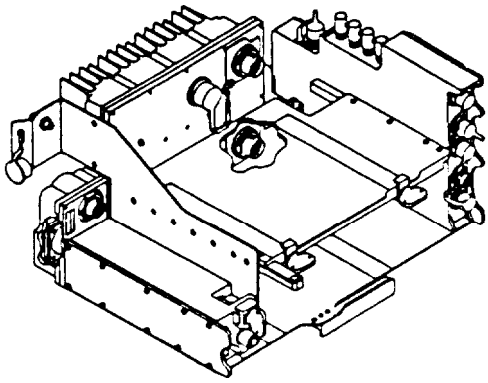

Mounting Adapter
(7239A)

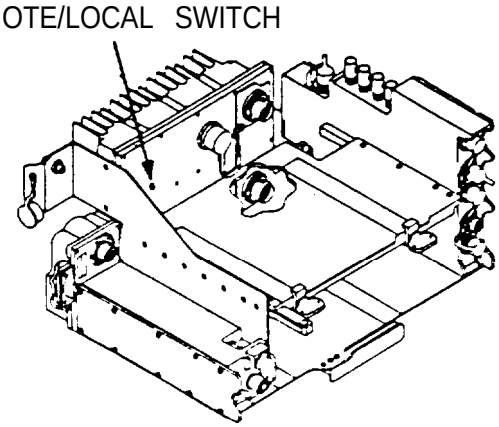

Mounting Adapter
(7239B)

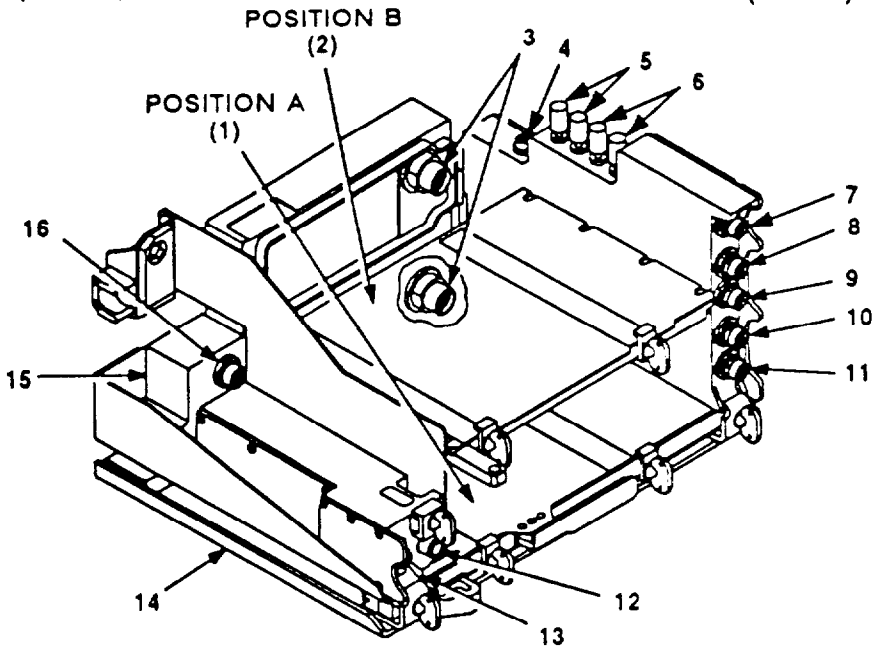

Mounting Adapter (7239 on mounting base)

CAUTION

SOME MODELS HAVE A REMOTE/LOCAL SWITCH. DO NOT SET SWITCH AS EQUIPMENT DAMAGE MAY OCCUR. CONTACT UNIT MAINTENANCE.

1. **Position A:** Used for single RT radio systems and the long range RT in the following systems: SR/LR, LR, SR/LR with D, and LR/LR.
2. **Position B:** Used for the short range RT in the following systems: SR/LR, SR/LR with D, and second LR RT in LR/LR.
3. **Systems connector:** Mates with RT systems connector P1 on back of RT.
4. **J9:** Used to connect control-monitor.

MOUNTING ADAPTER Continued

5, 6. **E1B/E2B and E1A/E2A:** Wireline adapter terminals for top (RT B) and lower (RT B) . Used to connect Control, Receiver-Transmitter C-11561 (C)/U.

7. **AUD/DATA B J2:** Connects to headset or handset for RT in position B.

8. **AUD/DATA A J3:** Connects to headset or handset for RT in position A.

9. **DATA B J4:** Connects to AUD/DATA connector on RT in position B. Routes audio from/to intercom; provides audio to AUD/DATA B J2.

10. **DATA A J5:** Connects to AUD/DATA connector on RT in position A. Routes audio from/to intercom: provides audio to AUD/DATA A J3.

11. **SPKR J6:** Connects to loudspeaker for monitoring RT in position A or B.

12. **Indicator lamp and lens:** Shows when power is on. Lights when CB1 is set to ON. On the AM-7239A/VRC version, when CB1 is first turned on, the indicator light will blink for about three seconds then stay lit. If the indicator light continues to blink, the mounting adapter is bad and Unit Maintenance must be notified. Lens adjusts brightness: turn it left (counterclockwise) to make lamp brighter; turn it right (clockwise) to make it dimmer. Do not turn past full bright. Full dim to full bright is approximately one quarter turn. Turn full clockwise when you are wearing night-vision goggles.

13. **Switch CB1:** Turns power on and off to mounting adapter and to mounting base of power amplifier (in LR/LR system).

14. **Mounting base:** Provides power to mounting adapter. Holds mounting adapter. Bolted in vehicle.

15. **Mounting adapter:** Provides interface and support to RT and power amplifier (in long-range radios).

16. **Connector J1:** Mates with connector on power amplifier. Passes control signals from RT in position A to power amplifier for long-range capability. (Note: Selected versions of this mount have an external “Remote-Local” switch similar to that used with single radio mount adapters.)

The power amplifier mount is used in the LR/LR radio system. It is bolted to the vehicle. It provides control interface, power and support to the second power amplifier.

1. **Connector J1.** Mates with connector on power amplifier. Passes control signals to power amplifier from mounting base power supply and RT in position B (page 2-21) .

2. **Switch CB1 .** Turns power on and off to power amplifier mount. When set to ON and left there, power is controlled by CB1 on mounting adapter (page 2-22).

3. **Indicator lamp DS1.** Shows when power to power amplifier mount is on. Lights when CB1 (2) and CB1 on mounting adapter are set to ON. Use dim function when wearing night-vision goggles. Equipment damage may result if lamp is turned past full bright. Full dim to full bright is approximately one quarter turn.

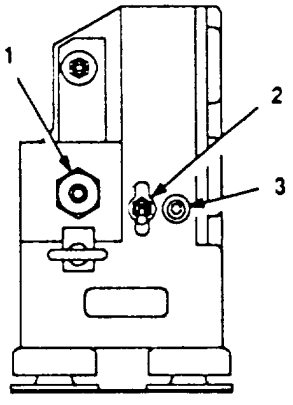

Power Amplifier Mount

POWER SUPPLY ADAPTER

The power supply adapter sets on the single radio mount. For cable connections, refer to pages 2-24 and 2-26.

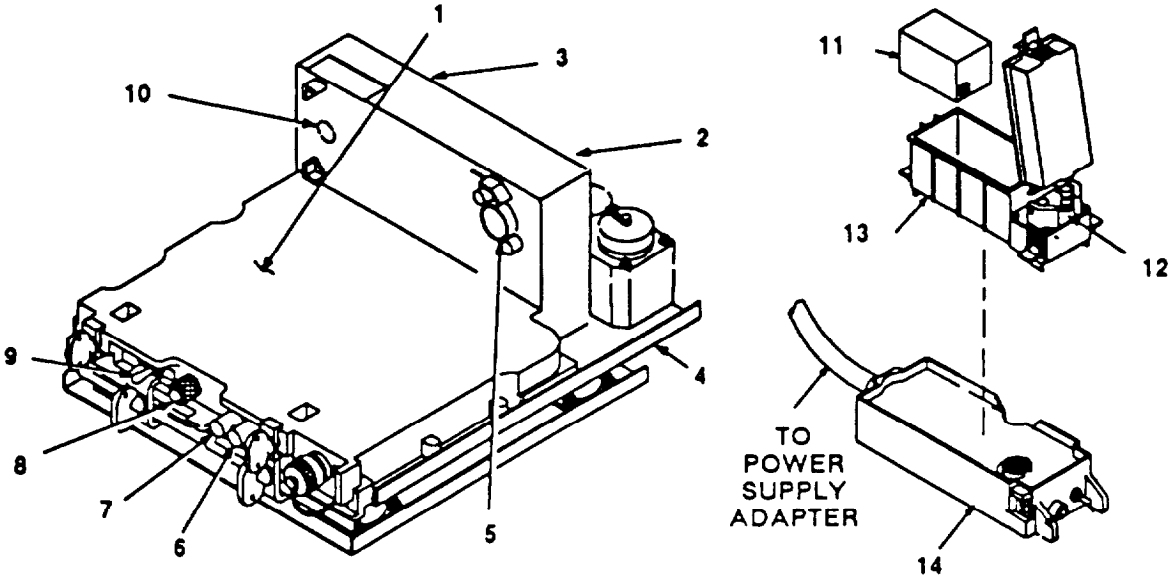

1. **Power Supply Adapter:** Provides interface and support to RT in single radio systems using single radio mount.
2. **J3:** Used to connect CM.
3. **J4:** Used to connect battery (vehicular backup).
4. **Single Radio Mount:** Provides power to and holds power supply adapter. Bolted in vehicle.
5. **J2:** Systems connector. Mates with RT systems connector on back of RT.

6, 7. **E1 and E2:** Used to connect RCU.

8. **Indicator Lamp and Lens:** Shows when power is on. Lights when CB1 is set to ON. Lens adjusts brightness; turn left (counterclockwise) to make lamp brighter: turn right (clockwise) to make lamp dimmer. Turn full clockwise when wearing night-vision goggles. Equipment damage may result if lamp is turned past full bright. Full bright to full dim is approximately one quarter turn.
9. **Switch CB1:** Turns power on and off to power supply adapter.
10. **Remote/Local Switch S1:** Used with AM-1780/VRC. Switch MUST NOT be set to remote position with power supply adapter set to ON.
11. **Battery:** Lithium battery used as backup power for vehicular radio.
12. **Binding Posts:** Used to connect RCU.
13. **Battery Box:** Holds battery. Mates with battery holder connector for vehicular radios requiring backup power.
14. **Battery Tray:** Used to hold battery and battery box when backup vehicular radio power is required. Connects to power supply adapter connector J4.

SECTION II. ASSEMBLY AND PREPARATION FOR USE

ITEM	PAGE
Scope	2-16
Manpack Radio Assembly	2-16
Installation of Primary Battery and Battery Box	2-16
Antenna	2-18
Handset	2-19
Field Pack	2-19
Vehicular Radio Assembly	2-20
Dismounting RT	2-20
Mounting RT	2-23
Cabling	2-24
Antenna	2-28
Checking and Setting Life Condition of Primary Battery	2-30
Removing and Changing Hold Up Battery	2-32
Pre-mission Check	2-32

SCOPE

This section describes how to assemble and prepare your equipment for a mission. It includes information for each radio system (MP, SR, SR-D, LR, SR/LR, SR/LR-D, and LR/LR) for mounting, dismounting, battery (if MP is used), cabling, pre-mission checks, and preparation for movement. Detailed illustrations and procedures are provided for these tasks.

MANPACK RADIO ASSEMBLY

NOTE

Vehicular dismount radios: If you must dismount the radio, do the steps for assembling the manpack radio.

INSTALLATION OF PRIMARY BATTERY AND BATTERY BOX.

To assemble a manpack radio, you must first check and install the battery. Refer to page 2-17; then perform steps a thru h.

INSTALLATION OF PRIMARY BATTERY AND BATTERY BOX. Continued.

WARNING

THE LITHIUM BATTERY USED WITH YOUR MANPACK RADIO IS HAZARDOUS IF MISUSED OR TAMPERED WITH BEFORE, DURING, OR AFTER DISCHARGE. STRICTLY OBSERVE THE FOLLOWING PRECAUTIONS TO PREVENT INJURY TO PERSONNEL OR DAMAGE TO EQUIPMENT.

- **DO NOT** heat, incinerate, crush, puncture, disassemble, or otherwise mutilate battery.
- **DO NOT** short circuit, recharge, or bypass any internal fuse.
- **DO NOT** store battery in equipment during periods of non-use.
- **TURN OFF** equipment immediately if you feel battery case becoming very hot, hear battery venting (hissing, or burping), or smell irritating gas (sulphur dioxide), Remove battery only after it cools to the touch; then return it to supply for disposal.

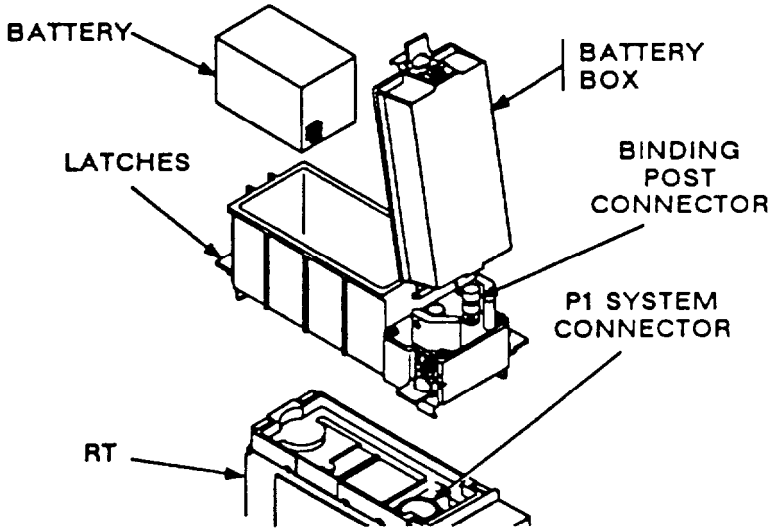

Installation of Primary Battery and Battery Box to RT

a. Visually Inspect battery box for dirt and damage. If battery has been previously used, note battery life condition number.

b. Stand RT on front panel guards; place battery box on RT. Secure using latches.

c. Check battery life condition (written on battery if battery is not new).

d. Write down number (for later entry into radio).

e. Place battery in battery box and mate connectors.

f. Close battery box cover, and secure using latches.

g. Return radio to upright position.

h. If used battery was installed, enter the battery life condition into the radio by performing the following:

(1) Set FCTN to LD.
(2) Press BATT; then CLR.
(3) Enter number recorded on side of battery.
(4) Press STO.
(5) Set FCTN to SQ ON.

ANTENNA.

CAUTION

DO NOT USE ANTENNA AS A HANDLE. EQUIPMENT DAMAGE MAY RESULT.

a. Screw whip Into antenna base.

b. Hand tighten.

c. Carefully mate antenna base with RT ANT connector.

d. Hand tighten. (Important not to over-tighten.)

e. Position antenna as needed by bending goose neck.

NOTE

Keep antenna straight up if possible. If the antenna is bent to a horizontal position, it may be necessary to turn the radio in order to receive and transmit messages.

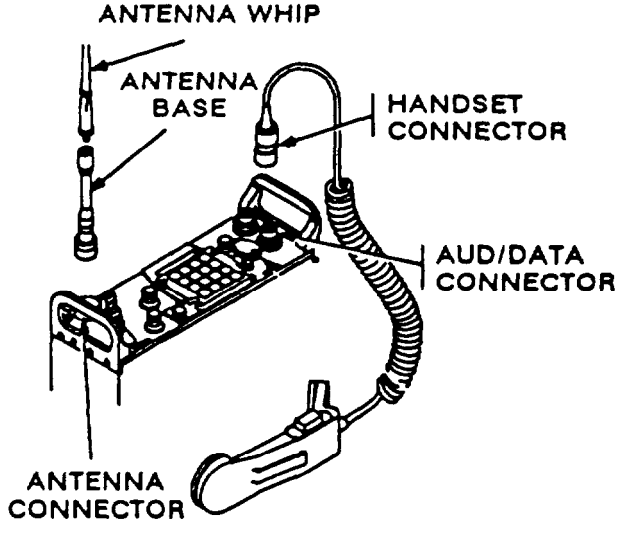

Installation of Manpack Antenna and Handset

HANDSET

Refer to the illustration on page 2-18; then connect and secure handset connector to AUD/DATA connector. Make sure that keys line up on handset connector and RT AUD/DATA connector; then push handset connector onto AUD/DATA connector and twist right (clockwise) to lock in place. Push handset connector in and twist left (counterclockwise) to remove handset.

FIELD PACK

a. Place RT in field pack with antenna on the left as shown.

b. Fold top flap of field pack over RT and secure flap to field pack using straps and buckles.

c. Put on field pack.

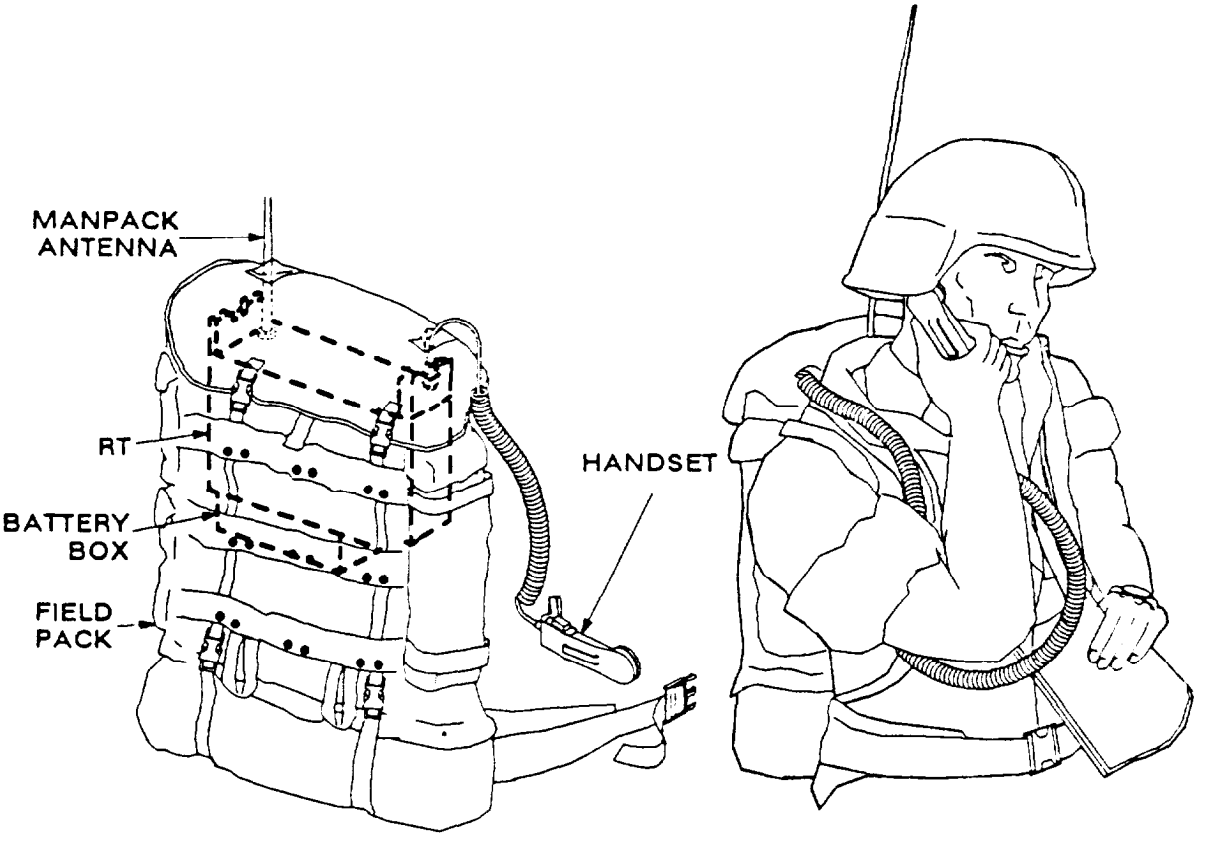

RT in Manpack

VEHICULAR RADIO ASSEMBLY

Vehicular radios are installed and removed by maintenance personnel. However, if you have a dismount radio, you need to know how to remove and install the RT. Refer to the illustrations on pages 2-21 and 2-22.

WARNING

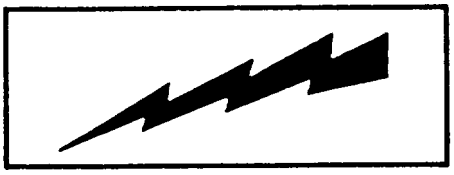

HIGH VOLTAGE

EXISTS AT CONNECTOR J1 ON MOUNTING ADAPTER. AVOID INJURY: BE SURE J1 IS COVERED OR CAPPED WHEN NOT IN USE.

CAUTION

BE SURE POWER SWITCH CB1 IS OFF WHEN REMOVING OR INSTALLING RT. IF IT IS NOT, EQUIPMENT DAMAGE MAY OCCUR.

DISMOUNTING RT.

When dismounting an RT to assemble a MP from a system that has two RT's, always dismount the RT in position B (upper RT). You must use the RT in position B so that the radio system retains long range capability. This procedure will allow you to receive communication until step f has been performed.

a. Remove retaining bar (if used).
b. Loosen hold-down clamps; turn sideways.
c. Set CM (if used) to OFF.
d. Set loudspeaker (if used) power switch to OFF.
e. Disconnect cables from RT connectors (refer to cabling illustrations: then disconnect cables that are connected to RT AUDIFILL, AUDIDATA, and RXMT connectors).
f. Disconnect antenna cable connected to RT ANT connector (refer to the appropriate cabling illustration as needed).
g. Set RT FCTN to STBY .
h. Set adapter CB1 to OFF.
i. Remove RT. Pull RT straight out.
j. Cap system connector.

VEHICULAR RADIO ASSEMBLY Continued

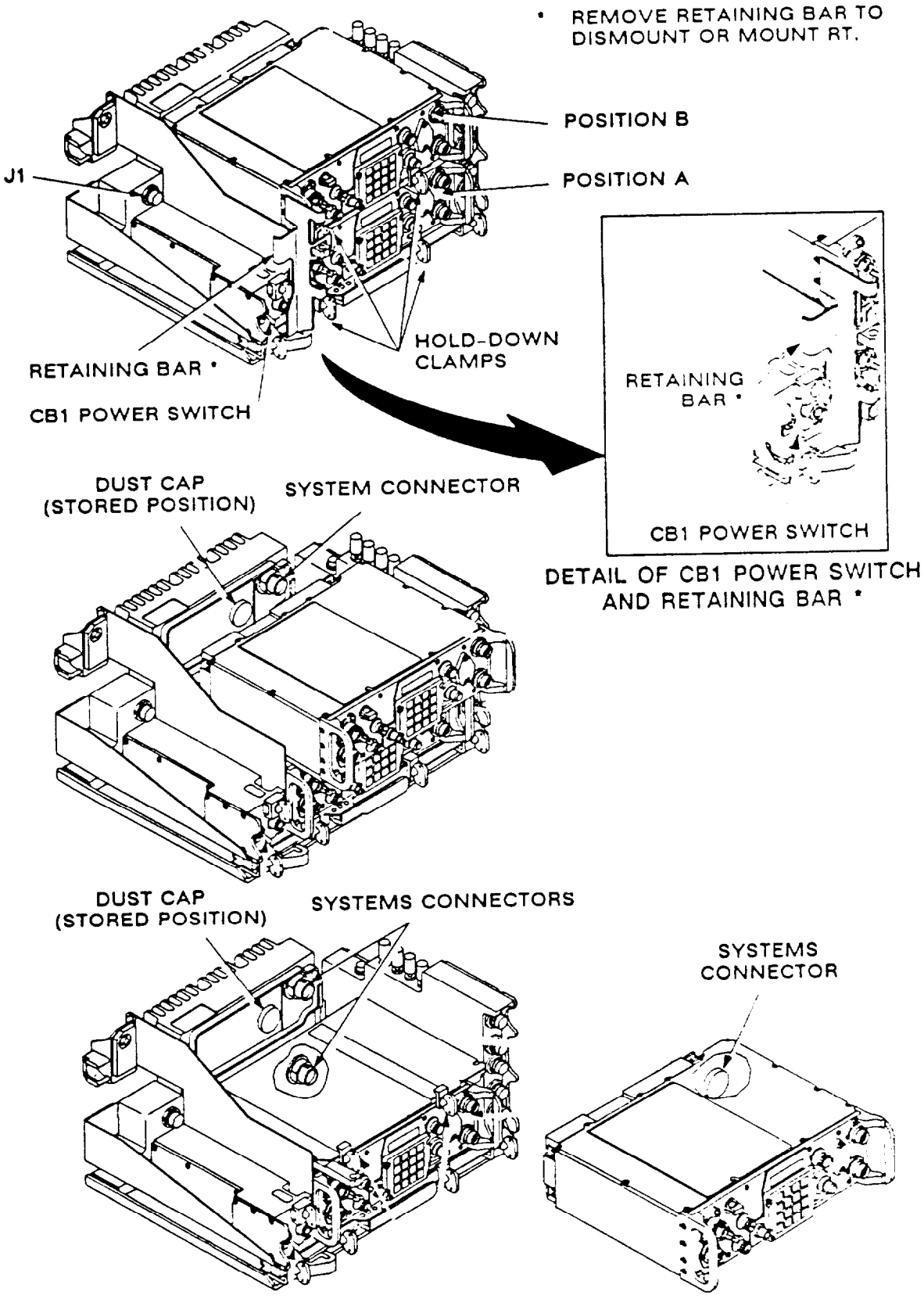

VEHICULAR RADIO ASSEMBLY Continued

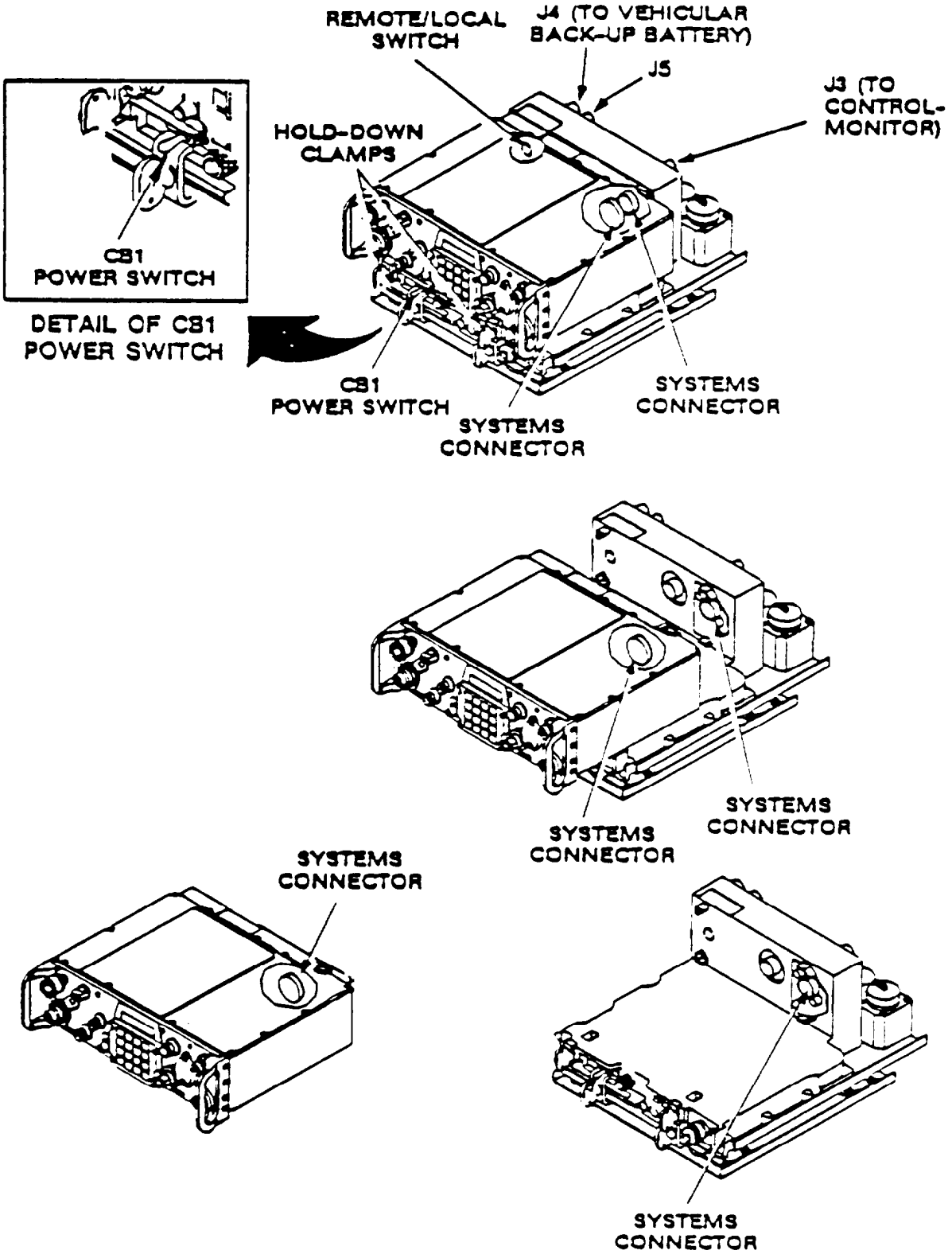

Mounting and Dismounting RT Mounted in a Power Supply Adapter

MOUNTING RT.

When mounting an RT refer to the illustrations on pages 2-21 and 2-22. If you have an assembled manpack radio, make sure you do the following (before mounting RT):

- Check and record battery life condition (page 2-30).
- The two FCTN switch position possibilities (after disassembling MP) are [CFF] and [STBY]. If FCTN switch is set to [OFF], pause in [Z-FH] until "GOOD" is displayed; then set FCTN to [STBY].
- Disassemble manpack radio, removing handset and antenna before battery (pages 2-17 and 2-18).
- Stow manpack accessories.

a. Remove cap from systems connector. Put cap on storage post. Check systems connector on RT for dirt and damage.

b. Set CB1 to OFF.

c. Loosen hold-down clamps and turn sideways. Slide RT into place. Align RT systems connector with systems connector of mount: then secure.

d. Secure RT. Reposition hold-down clamps and tighten screws. Secure retaining bar (if used).

e. Connect cables. See cabling diagrams (refer to appropriate cabling diagram).

f. Set adapter CB1 to ON and RT FCTN to SQ ON (or normal operating position). If COMSEC alarm is heard (beeping alarm), refer to page 2-38 for clearing information.

g. Set CM (if used) to ON.

h. Set loudspeaker (if used) power switch to ON.

i. Tie down antenna. (pages 2-28 and 2-29).

VEHICULAR RADIO ASSEMBLY Continued

CABLING. Vehicular radios are initially cabled by maintenance personnel. However, after an RT has been on a dismount mission: you must know how to connect the cables once it is remounted. The following illustrations show where the cables are connected. For retransmit radio cabling and external data equipment cabling, see Chapter 4. Audio devices used (headsets, handsets, or mics) depend on the mission. Radios used with intercoms may use intercom audio devices.

CABLING FOR SR.

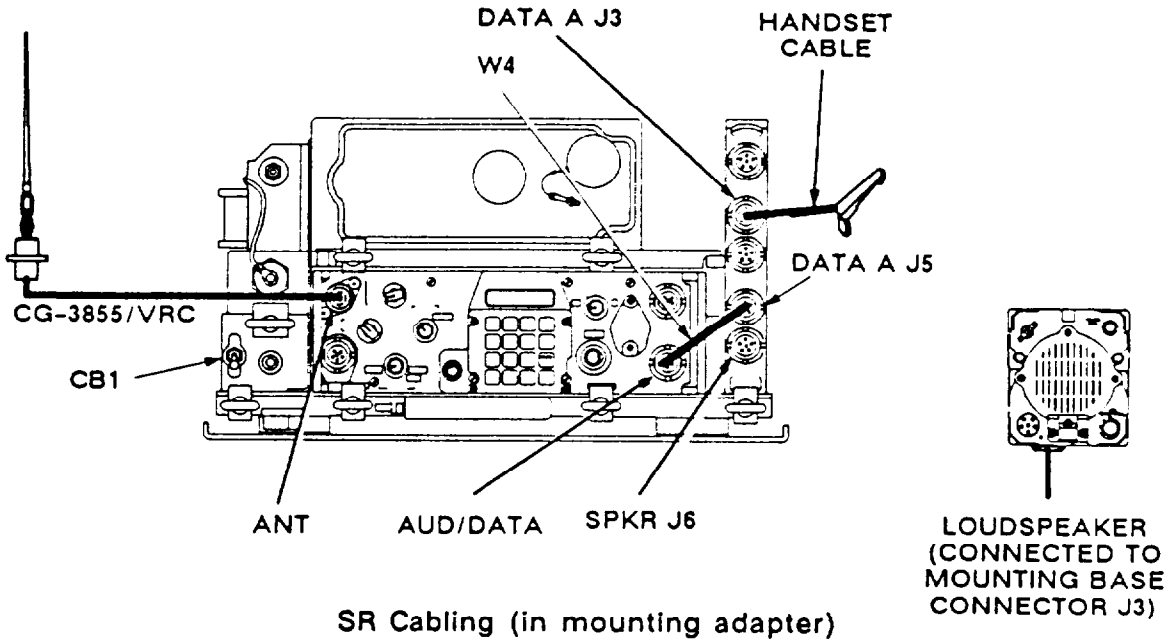

SR Cabling (in mounting adapter)

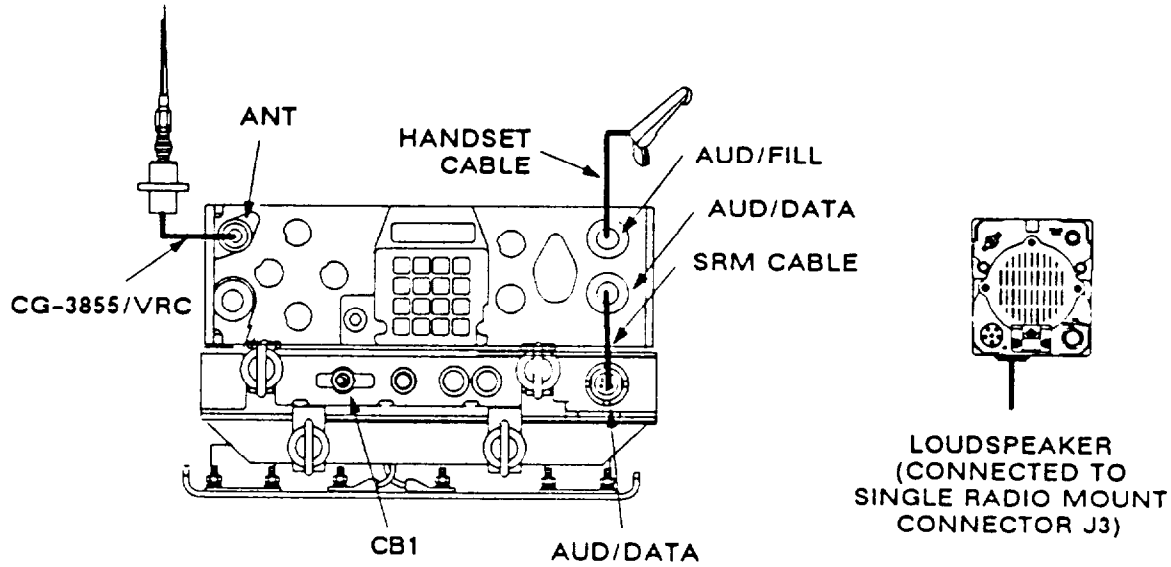

SR Cabling (in power supply adapter)

CABLING FOR SR/LR. Continued

CAUTION

MAKE SURE YOU CONNECT CABLES EXACTLY AS SHOWN. EQUIPMENT DAMAGE MAY RESULT IF CABLES ARE INCORRECTLY CONNECTED.

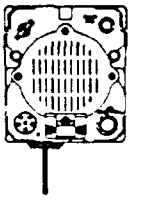

LOUDSPEAKER (CONNECTED TO MOUNTING BASE CONNECTOR J3 FOR RT IN POSITION A OR J4 FOR RT IN POSITION B)

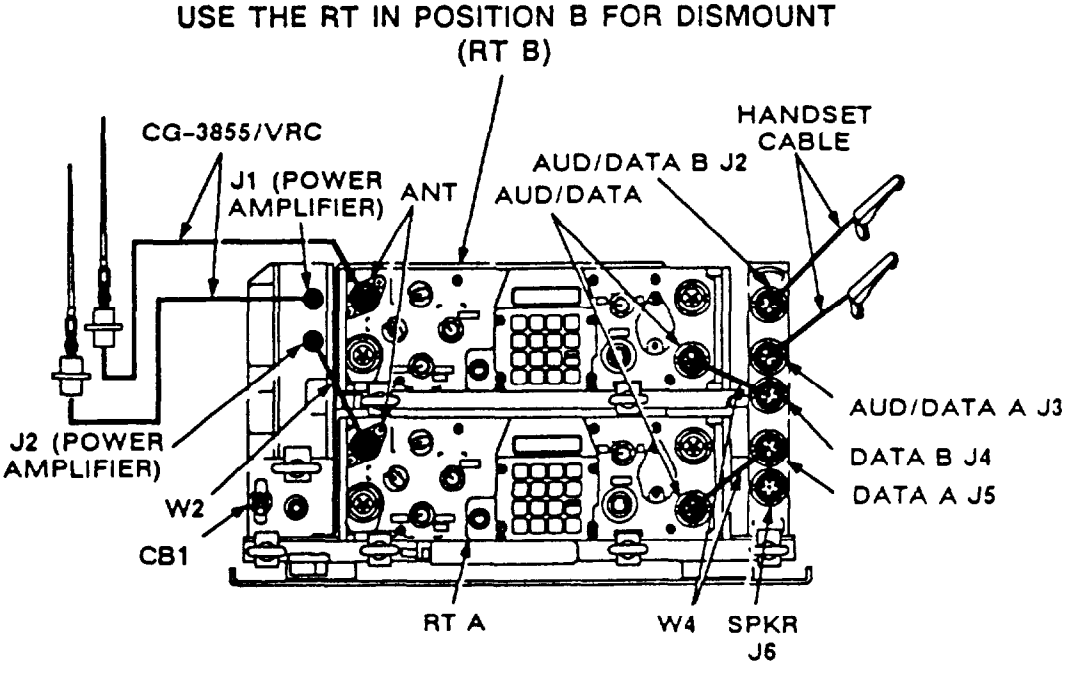

SR/LR Cabling (in mounting adapter)

VEHICULAR RADIO ASSEMBLY Continued

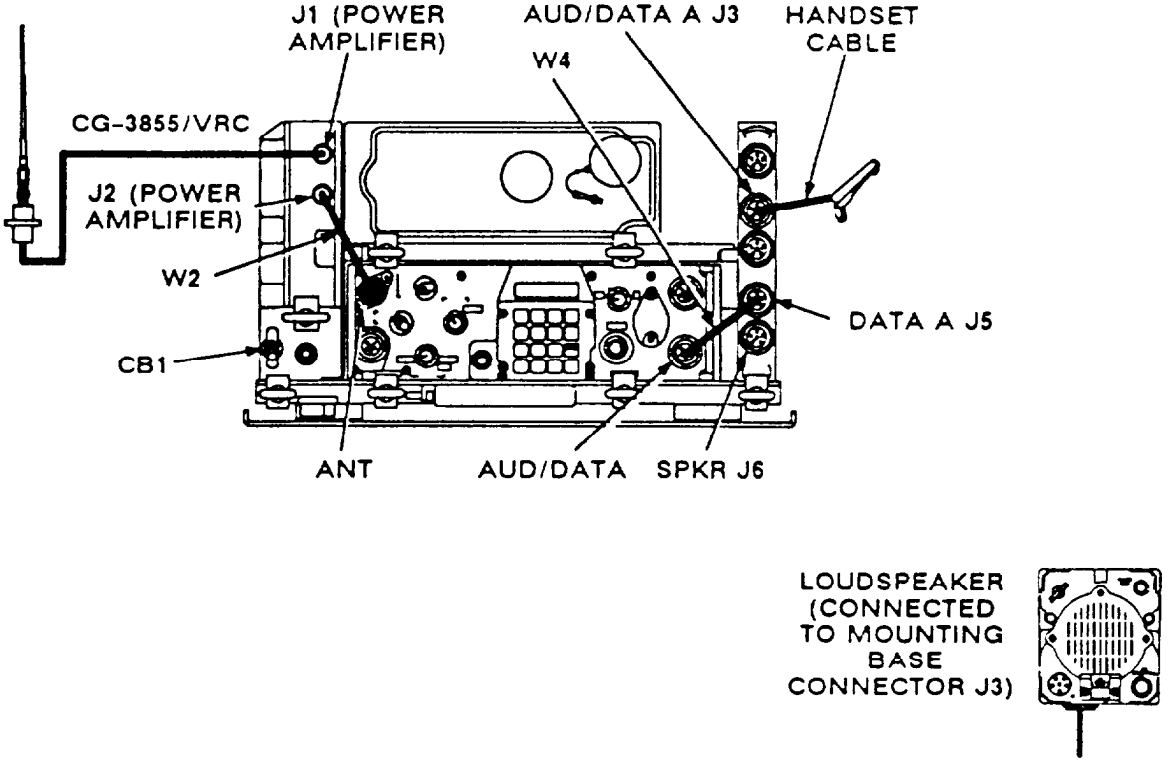

LR Cabling (in mounting adapter)

CABLING FOR LR/LR. Continued

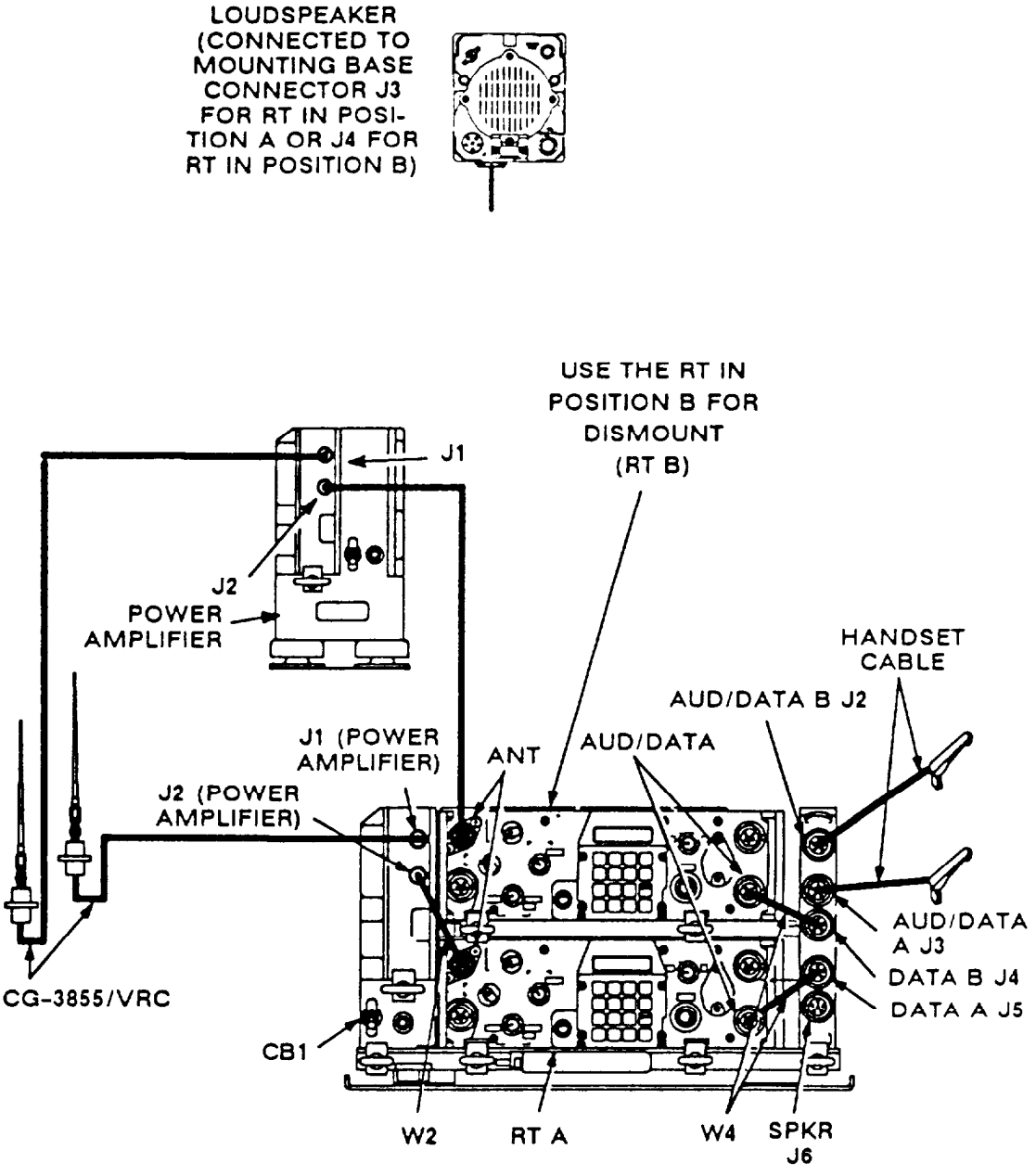

LR/LR Cabling (in mounting adapter)

VEHICULAR RADIO ASSEMBLY Continued

ANTENNA. There are four methods to tie down an antenna: (1) stay-down clamp, (2) snap-free clamp, (3) stay-down clip, and (4) snap-free clip.

STAY-DOWN CLAMP. Use the following method to tie down an antenna when it is necessary that the antenna remain tied down when it hits a stationary object.

a. Make sure that tip cap has been installed to the top tip of antenna element.

b. Slide clamp/clip of tiedown to middle of top antenna element. Make sure antenna is secured under clamp.

c. Pull antenna down until it forms a 45° - 60° angle with the ground. The distance from the tip cap to the ground must be more than 7 feet.

d. Using rope, tie down to vehicle. Never cross antenna elements when more than one antenna is being used.

- For best communication results, untie antenna(s) when stationary. Let it stand up straight.

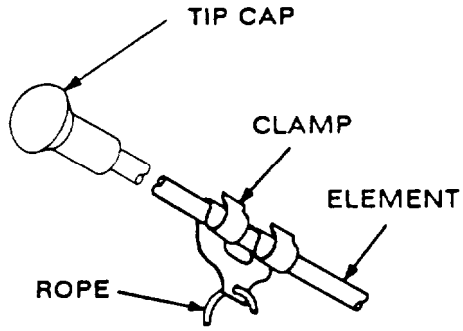

SNAP-FREE CLAMP. Use the procedure above when it is necessary that the antenna snaps free when it hits a stationary object. Refer to the following illustration.

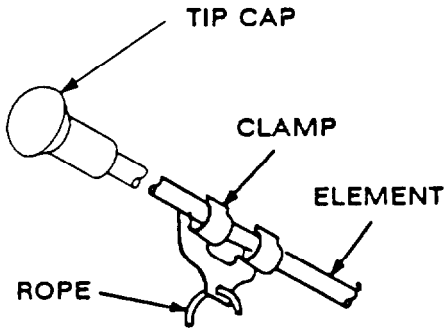

Snap-Free Clamp

STAY-DOWN CLIP. Use the tie down procedure on page 2-28 when installing antenna clip and it is necessary that the antenna remain tied down when it hits a stationary object. Refer to the following illustration: then perform the installation procedure on page 2-28.

SNAP-FREE CLIP. Use the tie down procedure on page 2-28 when installing antenna clip and it is necessary that the antenna snaps free when it hits a stationary object. Refer to the following illustration: then perform the installation procedure on page 2-28.

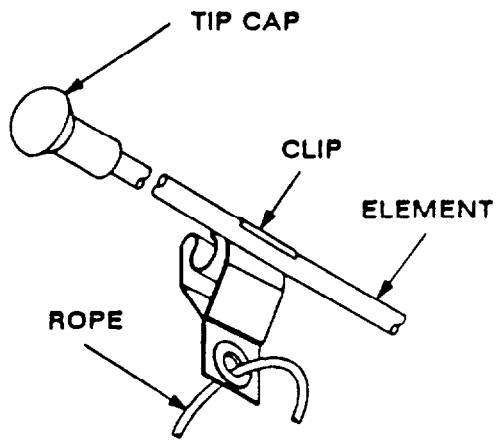

Stay-Down Clip

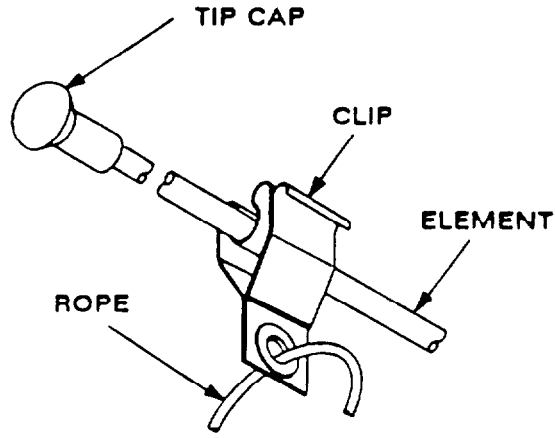

Snap-Free Clip

WARNING

AN ANTENNA TIP CAP MUST BE IN PLACE ON THE ANTENNA. WHEN TYING DOWN THE ANTENNA, BE SURE THE CAP IS THERE.

BE SURE TO TIE DOWN THE ANTENNA SO THE DISTANCE FROM THE GROUND TO THE TIP CAP IS 7 FEET OR MORE.

DEATH OR SERIOUS INJURIES CAN RESULT WHEN TIP CAPS ARE NOT USED, OR WHEN ANTENNAS ARE TIED DOWN TOO CLOSE TO THE GROUND.

DEATH OR SERIOUS INJURIES CAN RESULT WHEN AN ANTENNA WHICH IS NOT TIED-DOWN HITS A FIXED OBJECT SUCH AS AN OVERHEAD BRIDGE, TREE LIMB, ETC. FLYING ANTENNA PARTS MIGHT STRIKE PERSONNEL.

RF ENERGY IS PRESENT NEAR THE ANTENNA DURING TRANSMISSION. MAINTAIN AT LEAST 30 INCHES BETWEEN VEHICULAR ANTENNA AND PERSONNEL DURING TRANSMISSIONS.

CAUTION

MAKE SURE CLAMP OR CLIP DOES NOT CUT INTO ANTENNA ELEMENT.

CHECKING AND SETTING LIFE CONDITION OF PRIMARY BATTERY

Manpack and dismount radios. These are battery-powered radios. A "Battery Life Indicator" gives you an estimate of remaining life, and a clock-type chart makes It easy for you to determine at any time how much of the normal 20 hours of battery life has been used. For combat and critical missions, when having to stop to change the battery could be a serious problem, you should replace the battery when the indicator reads "11" or higher. This means you are throwing out a battery with some remaining life, but that is expected in critical situations. For training, it is necessary to conserve resources, and the battery should be used until it is drained of power. It is particularly important that you record the battery life when placing your radio into operation. In a training situation, "The Battery Life Indicator" helps you predict when your battery will be drained and a replacement required.

a. Chock battery life condition: Sot FCTN to SQ ON: then press BATT.

b. Write down battery life condition shown on display. Under normal circumstances, the battery may be used for up to 20 operating hours (remember: RT duty cycle is 9:1). To determine remaining hours of battery life, refer to the table on page 2-31). For combat and critical missions, replace the battery as soon as possible if the display shows "11" or higher. Display will show "00" when any battery is installed or RT FCTN is set to OFF.

If you change or remove battery, perform steps b(1) and b(2). If you wish to set the battery life condition, go on to step c.

(1) Set FCTN to STBY ; then remove battery. Log battery life condition displayed in step in step b on battery if it is to be kept for future use.

(2) Replace battery. Perform battery and battery box procedure: then go on to step c to set battery life condition.

c. Log the number displayed in step b on the battery tag or decal.

d. Press CLR (display shows two lines).

e. Press number buttons (enter number on tag or decal). This must be a two-number entry (00 - 10). Display shows the number you entered.

f. Press STO (display blinks and shows the number stored).

g. Sat FCTN to SQ ON.

WARNING

If you are changing the battery, turn in discharged battery to supply. They will discard the battery for you. Do not throw discharged battery in ordinary trash. During combat and tactical field exercises, follow unit SOP regarding disposition of unusable batteries.

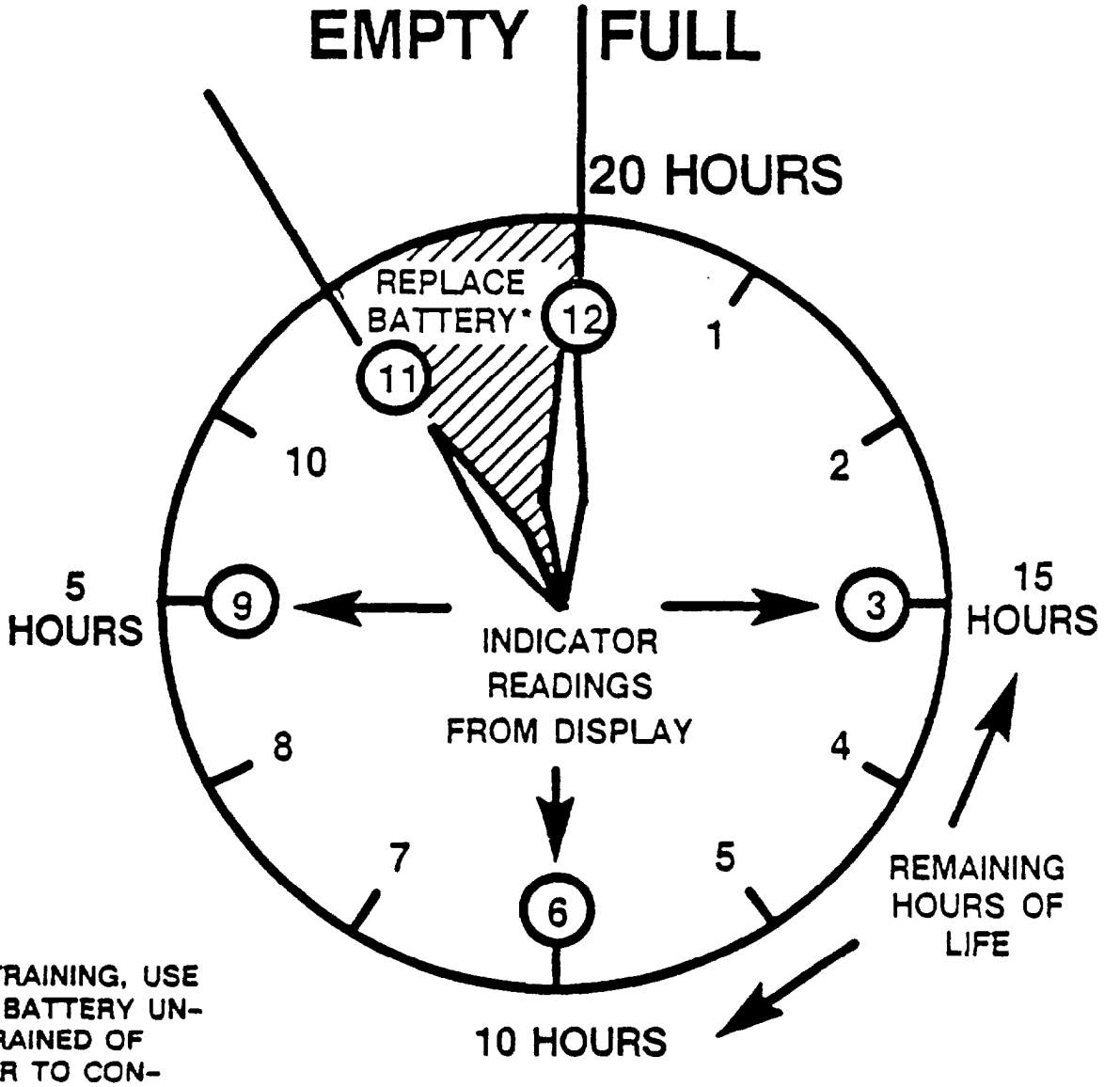

FOR TRAINING, USE EACH BATTERY UNTIL DRAINED OF POWER TO CON-

Battery Life Indicator Readings and Remaining Hours
(BA-5590/U Lithium Battery)

A diamond-shaped light on the display flashes if the battery is weak (a steady light indicates that the battery is extremely weak or missing). The light only appears if the keyboard display is active. Refer to the following illustration: then perform steps a thru c to remove and change HUB:

NOTE

Whenever FCTN is set to STBY, power is being drained from the HUB battery. Use STBY to maintain data fills for mission readiness. Set FCTN to OFF whenever radio is taken out of action at the end of operation or mission. Turning off vehicular CB1, with RT in STBY does not prevent drain of HUB power.

a. Remove two screws and HUB cover.

b. Remove HUB; then install new HUB, inserting flat end (positive) first.

c. Re-install HUB cover and two screws (screws must be tightened just until snug enough to keep out moisture).

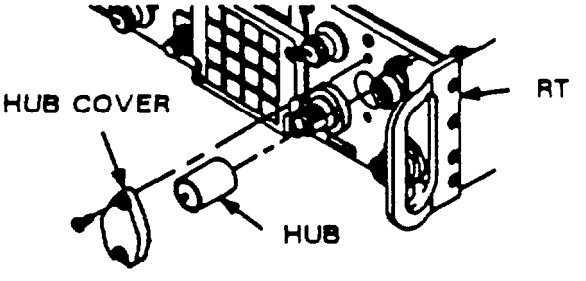

Removing and Changing HUB

PRE-MISSION CHECK

If you do not perform the following steps, you may risk radio failure during a mission.

- Make sure your radio is assembled correctly (pages 2-16 thru 2-32).
- Make sure you've done the following PMCS (pages 5-1 thru 5-7), and the routine checks (page 5-16).

  PMCS: Battery physical condition (page 5-3), battery electrical condition (page 5-3), HUB electrical condition (page 5-3), receiver-transmitter self-test (page 5-4), transmitter (page 5-5), mounting adapter and mounting base (page 5-5), remote operation (page 5-6), control-monitor self-test (page 5-6), control-monitor RT function control (page 5-7).

  Routine checks: Antennas, cables and cable connectors, controls and switches, mounting and assembly hardware (page 5-16).

- Check battery life condition (page 2-30).
- If FCTN is at OFF, move it to STBY; then move It to SQ ON.
- Check required load (do you have the correct FH data, COMSEC keys and MAN frequency?).
- Make sure you can establish communication on each net you will be operating In. If you cannot communicate, perform the communication troubleshooting procedure on page 5-12 or refer to operator troubleshooting, page 2-51.

SECTION III. SINGLE CHANNEL OPERATING PROCEDURES

ITEM PAGE

Loading Frequencies 2-33
Clearing Frequencies 2-34
Loading Offset Frequencies 2-34
Clearing Offset Frequencies 2-34

OPERATION IN SINGLE CHANNEL

You must load your RT with one or more SC frequencies.

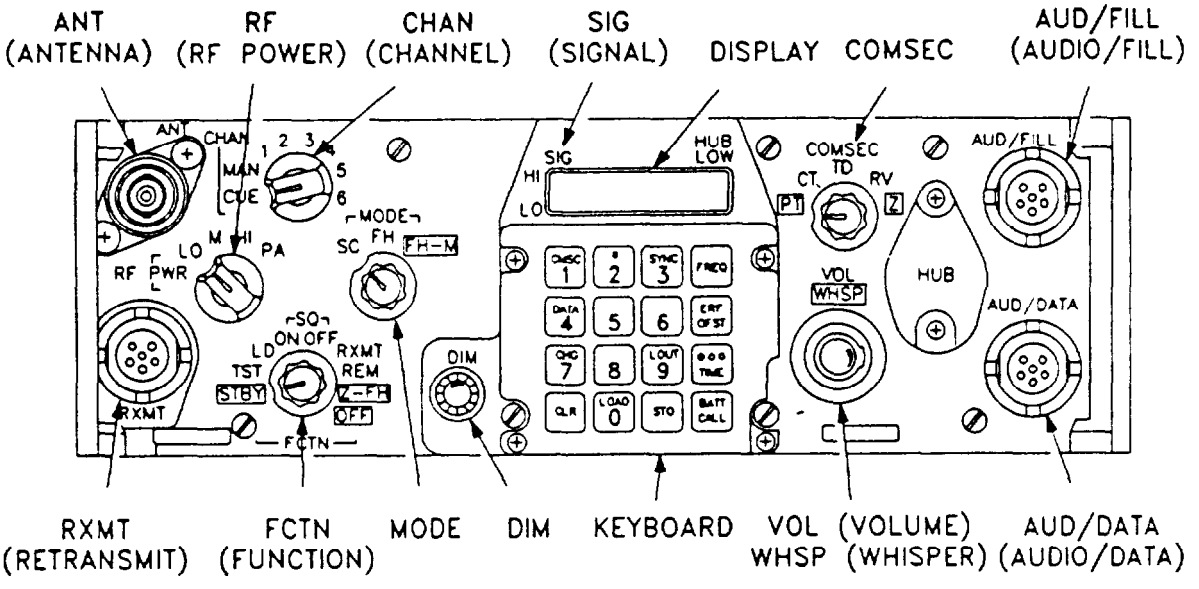

RT Front Panel

LOADING FREQUENCIES (MAN, CUE, 1-6)

LOADING SC FREQUENCIES. The procedure for loading SC frequencies requires setting the proper switches, pressing the correct number keys for the frequency you wish to load, and storing the load in RT permanent memory by pressing STO button.

a, Obtain authorized operating frequency from SOI or NCS.

b. Refer to the illustration of RT front panel above: then set FCTN to LD.

c. Set MODE to SC.

d. Set CHAN to MAN, CUE, or desired channel (1 - 6) where frequency is to be stored.

e. Press FREQ (display will show "00000", or to frequency RT is currently tuned).

f. Press CLR (display will show five lines).

g. Enter the numbers of the new frequency (using keyboard buttons).

LOADING FREQUENCIES (MAN, CUE, 1-6) Continued

- If you make a mistake while entering a frequency, press CLR (this action will delete the last digit entered).

NOTE

It is important that you enter another number, or store the frequency within 7 seconds. Otherwise, the display will go blank, and you will have to re-enter the numbers. If you require more than 7 seconds to perform a step, continue to press the last button, and the 7 second clock will be stopped.

h. Press STO (display will blink and show the frequency you just stored).
i. Repeat steps a thru h for additional frequencies that you wish to load.
j. Set FCTN to SQ ON (or normal operating position).

CLEARING FREQUENCIES (MAN, CUE, 1-6)

CLEARING SC FREQUENCIES. If you wish to clear a frequency from the RT, you must perform the following procedure using the correct switch settings and pressing FREQ, CLR, LOAD, and STO. When no frequency is desired, pressing STO stores no frequency in the RT permanent memory.

a. Set MODE to SC.
b. Set CHAN to MAN, CUE, or desired channel where frequency is to be cleared.
c. Press FREQ.
d. Press CLR.
e. Press LOAD: then press STO.
f. Set FCTN to SQ ON (or normal operating position).

LOADING OFFSET FREQUENCIES

LOADING OFFSET FREQUENCIES. It may be necessary to offset an SC frequency that is loaded in your RT. Your NCS will direct you to offset your SC frequency when it is necessary. This procedure allows you to change the SC frequency by plus or minus 5 kHz or plus or minus 10 kHz.

a. Set FCTN to SQ ON.
b. Set CHAN to MAN, CUE, or desired channel (1 - 6) to be loaded with offset.
c. Press FREQ, OFST, and CHG.
d. Continue to press CHG until desired offset is displayed.

CLEARING OFFSET FREQUENCIES

CLEARING OFFSET FREQUENCIES. When you wish to clear the SC frequency of the offset, simply continue to press CHG until "00" is displayed. The SC frequency will return to the original frequency before the offset was loaded.

- If no offset is desired, press CHG until "00" is displayed.

SECTION IV. FREQUENCY HOPPING OPERATING PROCEDURES

ITEM PAGE

Scope 2-35
Loading FH Data (local fill) 2-35
Clearing FH Data 2-37
Loading COMSEC Keys (local fill) 2-38
Basic COMSEC Procedures 2-39
Pre-mission Check 2-40
Net Opening.. 2-41
Cold Start Net Opening 2-41
FH Update Using ERF 2-44
Cue 2-45
Late Net Entry 2-45
Passive 2-45
CUE and ERF 2-46
Jamming and Antijamming 2-47

SCOPE

This section contains information on FH operation. Operation in FH is different than SC operation in which only one frequency is used to communicate. FH is a preferred method of communication because it offers resistance to jamming and enemy direction finding equipment. SINCGARS offers the new capability of using 2,320 frequencies over a short period of time. In fact, when SINCGARS is operating in FH, it changes frequencies more than 100 times per second, making it difficult to jam. Preparation for FH operation includes FH data loading and pre-mission check to ensure mission success. If you will be communicating in a net using secure communication, you must load COMSEC keys and be familiar with basic COMSEC procedures. if communication is lost while operating in a FH net, refer to the late net entry procedures for information.

LOADING FH DATA (LOCAL FILL)

An ECCM fill device is used to load FH data into the RT. There are 15 labels on the side of the fill device that lists information about the data that is stored in the fill device memory. Each label represents a position where the data is stored. Specific data is selected by setting the fill device SELECT switch to the label position of the desired data. The NCS will tell you which data to select and where to store it in your RT.

LOADING FH DATA (LOCAL FILL) Continued

LOADING FH DATA. Check with NCS or SOI for required FH data.

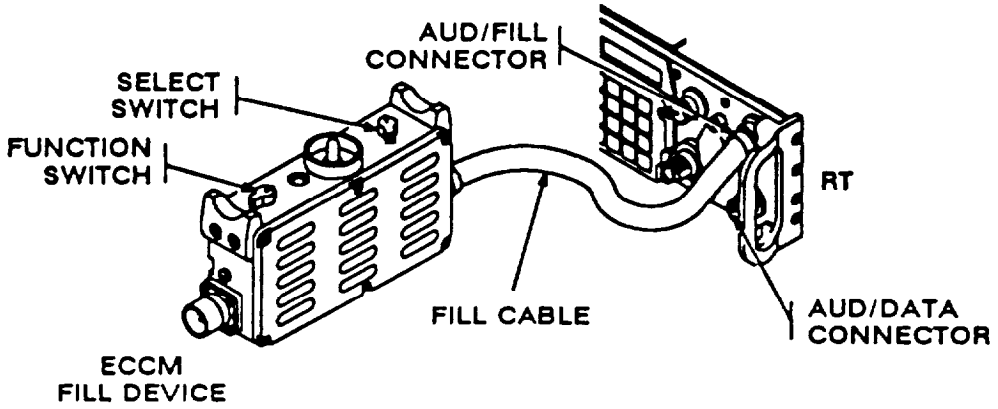

ECCM Fill Device Connected to RT

a. Make sure that the ECCM fill device is loaded. If the ECCM fill device needs to be filled, see pages 4-13 thru 4-15.

b. Set ECCM fill device function switch to OFF.

CAUTION

ALWAYS USE A FILL CABLE TO CONNECT FILL DEVICE TO RT. EQUIPMENT DAMAGE MAY RESULT IF A FILL CABLE IS NOT USED.

c. Connect ECCM fill device to RT connector AUD/FILL using fill cable.

d. Set RT FCTN to LD.

e. Set RT MODE to FH.

f. Set CHAN to where data is to be loaded (NCS will direct you).

g. Set ECCM fill device select switch to position containing the desired data.

h. Set ECCM fill device function switch to ON.

i. Press LOAD. Display will cycle as shown, and a beep is heard.

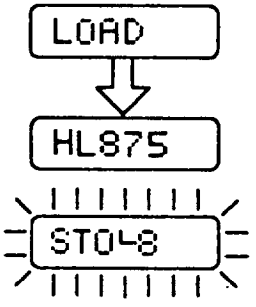

j. Press STO. Display will blink and show "STOL" followed by the first digit of the data.

k. Change ECCM fill device select switch to position containing data desired next.

l. Press LOAD. Display will cycle as shown, and a beep is heard.

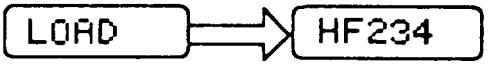

m. Press STO; then press the number button of the channel in which the data is to be stored. Display will blink and show "STO" followed by the channel number in which the data was stored.

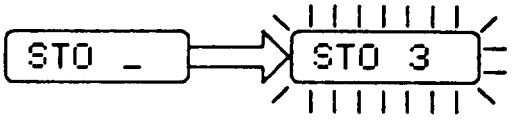

n. Set ECCM fill device function switch to OFF.

o. Disconnect ECCM fill device.

p. Set RT switches as needed for normal operation.

NOTE

Same procedure applies when changing FH data for during-operation updates using a fill device.

CLEARING FH DATA

This procedure allows you to clear FH data from your RT.

NOTE

You can't clear the channel you're operating on.

a. Set FCTN to LD.

b. Set MODE to FH.

c. Press CLR followed by the number of the channel that contains the data you wish to clear. Display changes as shown: a beep is heard.

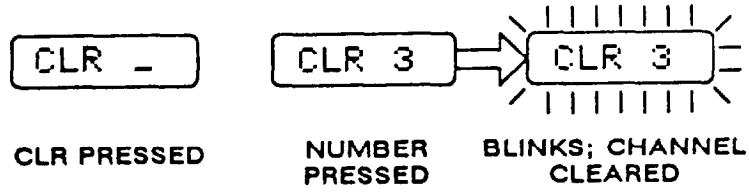

d. Press CLR followed by LOUT; then press the left digit of the data you wish to clear (1-8). Display changes as shown; a beep is heard.

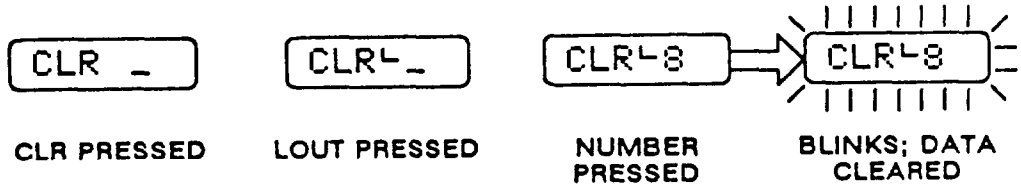

e. Set RT switches to normal operating positions.

LOADING COMSEC KEYS (LOCAL FILL)

LOADING COMSEC KEYS (LOCAL FILL). Use the following procedure to load COMSEC keys. The NCS will tell you in which channel to store COMSEC keys. There are two types of COMSEC keys, referred to as TEK's and KEK's. This procedure is used to load both types. The NCS and the keyboard display make use of the terms TEK and KEK.

a. Turn off fill device (KYK-13 or KYX-15); then connect fill cable to RT AUD/FILL connector.

b. Set RT switches: FCTN to LD, COMSEC to CT.

NOTE

COMSEC ALARM

- If COMSEC alarm (beeping alarm) is heard, key handset twice for a minimum of 1/2 second each key. If a good COMSEC key is already in the radio, the alarm will clear to no alarm. If the radio doesn't have a good COMSEC key, the alarm will clear to a steady tone.
- A COMSEC key can only be loaded when a steady tone is present at the handset. The steady tone will clear to no alarm if fill procedure is successfully completed.
- If the COMSEC alarm will not clear, set FCTN to [STBY] ; then to TST. If TST results in a "FAIL 5" display, there is a COMSEC failure. If "GOOD" is displayed, resume normal operation.

c. Set fill device controls (KYK-13, or KYX-15): Set MODE to ON; then select COMSEC key to be loaded.

NOTE

If COMSEC keys are required and MAN channel is being used, the COMSEC key used will default to the COMSEC key stored in channel 5. If necessary, scroll to another channel containing a COMSEC key and check its validity (refer to step b notes) before resuming operation.

d. Load COMSEC key:

KYK-13 or KYX-15

Press RT LOAD.
Display flashes "LOAD", then "H TEK" (or "H KEK").

Press STO; then enter the channel number where COMSEC key is to be stored. Display will blink, and two beeps will be heard.

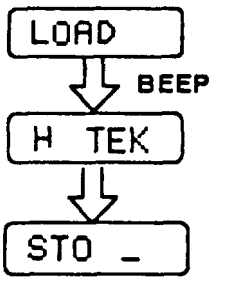

NOTE

Same procedure applies when changing COMSEC key for during-operation updates using a fill device.

BASIC COMSEC PROCEDURES

SECURE COMMUNICATION. Secure operations may be done in SC or FH modes. Two radios having the same COMSEC key can communicate in cipher text by setting the COMSEC switch to CT and selecting the same COMSEC key. A COMSEC key is a variable used to enable secure communication. Have one or more COMSEC keys loaded into your RT before a mission if you need to handle secure traffic. You can then exchange secure voice and data with other RT-1523(C)/U having the same COMSEC key, The RT CHAN switch selects a COMSEC key. You can keep the same channel but change the COMSEC key by scrolling. You can also communicate with other VHF FM radios which are equipped with a KY-57 COMSEC device.

NOTE

- When a station in [PT] calls one in CT, the receiving operator can hear the message and the beeping in the background. This tells the receiving operator that the sender has COMSEC set to [PT] rather than CT.
- Even if you have a COMSEC key loaded, when your radio has been set to [STBY] and is switched to SQ ON, you will hear a COMSEC alarm. Pressing PTT twice will clear this alarm,

SCROLLING COMSEC KEYS. Use this procedure to change the COMSEC key (you cannot scroll or change COMSEC key in channel 6), and to keep the same SC frequency, or FH net.

a. Set RT CHAN to 1, 2, 3, 4, 5.

b. Press CMSC.
Display shows "TEK n".

[TEK 2]

c. Press CHG to change COMSEC key. Display shows new TEK.

[TEK 3]

d. Repeat step c until the COMSEC key you want Is displayed.
   - You must press handset push-to-talk to clear alarm.

[TEK 5]

* FUNCTION. Refer to the local SOP for authorized use of this function. The * function may be used in CT and can be changed from OFF to ON by pressing */2; then CHG. If you are using a RT-1523(C)/U with a device that doesn't have a * function capability, set the RT-1523(C)/U * function to OFF.

PRE-MISSION CHECK

If you do not perform the following steps, you may risk radio failure during a mission.

- Make sure your radio is assembled correctly (pages 2-16 thru 2-32).
- Make sure you've done the following PMCS (pages 5-1 thru 5-7), and the routine checks (page 5-16).

  PMCS: Battery physical condition (page 5-3), battery electrical condition (page 5-3), HUB electrical condition (page 5-3), receiver-transmitter self-test (page 5-4), transmitter (page 5-5), mounting adapter and mounting base (page 5-5), remote operation (page 5-6), control-monitor self-test (page 5-6), control-monitor RT function control (page 5-7).

  Routine checks: Antennas, cables and cable connectors, controls and switches, mounting and assembly hardware (page 5-16).

- Check battery life condition (page 2-30).
- If FCTN is at [OFF], move it to [STBY]; then move it to SQ ON.
- Check required load (do you have the correct FH data, COMSEC keys and MAN frequency?).
- Stand by for net opening (NCS will contact you). Make sure you can establish communication on each net you will be operating in. If you cannot communicate, perform the communication troubleshooting procedure on page 5-12 or refer to operator troubleshooting, page 2-51.

NET OPENING

Your RT needs special data to operate in a frequency hopping (FH) mode. You, the operator load some data and the NCS ERF's the rest. Always keep in mind that your NCS directs net opening, and that you must listen to NCS commands carefully. Cold start net opening is the procedure used to open a net. If net is to be opened in CT, refer to page 2-38 for information on loading COMSEC keys.

COLD START NET OPENING. After the necessary FH data has been loaded into your RT in preparation for a cold start net opening, the NCS will send additional data to your RT. This is called an ERF. You will be directed through the net opening by the NCS.

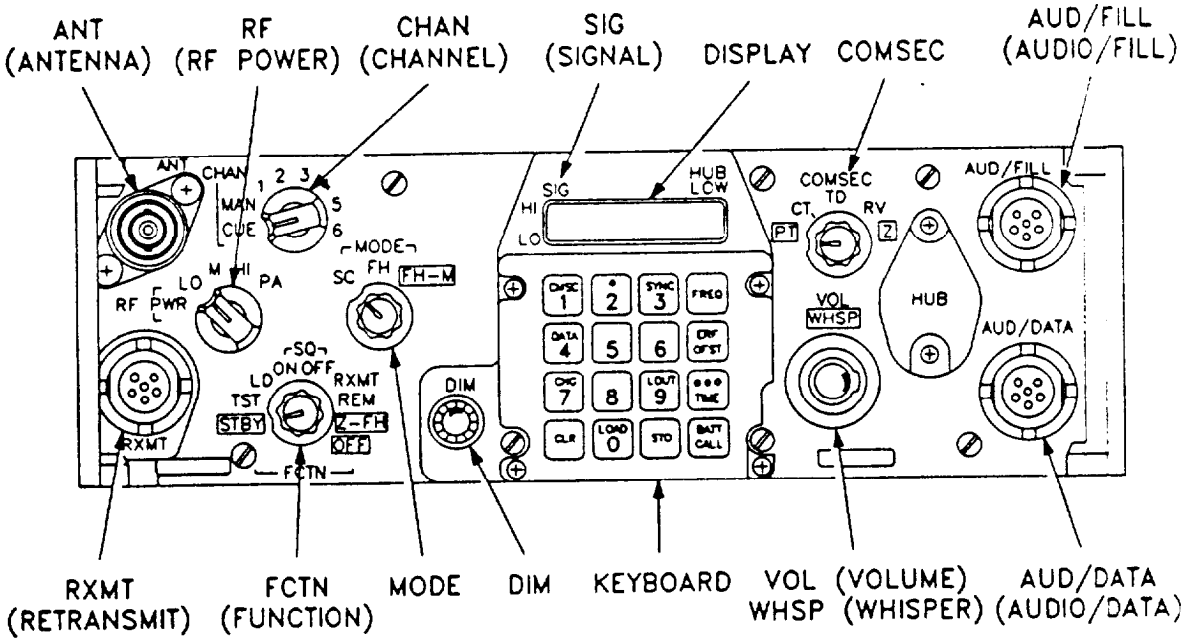

RT Front Panel

NET OPENING Continued

a. Upon NCS net opening alert, load the following elements into your RT:

- MAN channel frequency (page 2-33).
- CUE channel frequency if designated by commander (page 2-33).
- FH data from fill device (pages 2-36 and 2-37).
- COMSEC key from fill device (page 2-38).

b. Set FCTN to SQ ON: then to LD.

c. Set COMSEC to CT (if required).

d. Set CHAN to MAN, MODE to FH. Display will show "COLD".

e. Stand by on MAN channel. The NCS will call you on MAN channel to verify communication and tell you where to store ERF.

f. The NCS will transmit ERF to your RT. The display will show "HF234", telling you that the ERF was received.

- If you do not receive the ERF, monitor MAN channel, and wait. The NCS will come back to you.

g. Press STO to store the ERF.

h. RT display then asks where you want to store the ERF. You enter the number 1 (see illustration below). Display changes as shown; beep is heard.

NOTE:

Your own primary net is normally stored in CHAN 1. When entering other nets, use CHAN 2 - 6 as desired.

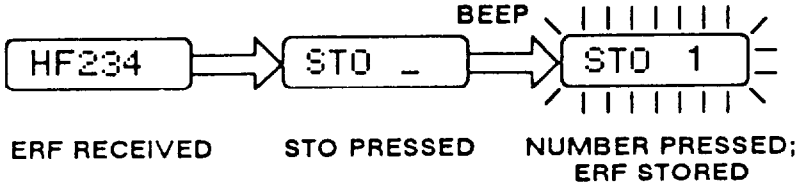

i. On command, set CHAN to position 1. Display will show "F234".

j. NCS will contact you to confirm communication on channel 1.

k. On command, set FCTN to SQ ON (or normal operating position).

FH UPDATE USING ERF

This procedure is used to update FH data during net operations. It can also be used to add new FH data. During an update, the net communicates on the FH channel it has been using.

FH Update Procedure. The following steps are designed for net members.

NOTE

Do not change the CHAN setting until all updating is complete.

a. NCS will contact you. Acknowledge call. NCS will tell you in which channel to store ERF, and to confirm reception and storage of ERF after it is finished.

b. Set FCTN to LD. Leave all other controls as they have been for past communications.

c. Stand by for update. NCS will transmit ERF.

d. Store ERF where directed by NCS (display will show either "HL875" or "HF234"):

- If display is as shown ("HL", followed by numbers), press STO and acknowledge that ERF was received and stored as during cold start.

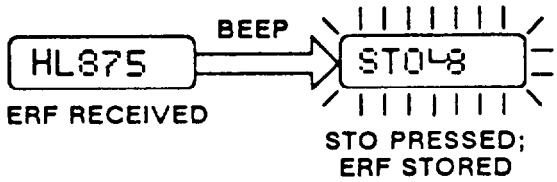

- If display is as shown ("HF", followed by numbers), press STO; then enter the channel number that NCS directed you to use (step a). Acknowledge that ERF was received and stored as during cold start.

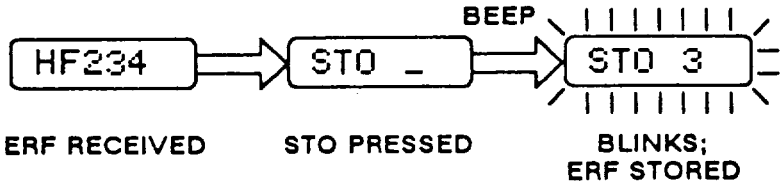

e. Acknowledge when ERF is received and stored.

f. Set FCTN to normal operating position.

g. On command, set CHAN to where ERF was stored.

- If FH update is being done in CT, you must scroll to net's operational COMSEC key, or have a COMSEC key loaded into the channel selected for update.
- If communication is not established, set CHAN to where you last had communication. The NCS will contact you.

CUE

CUE is used when you need to contact a FH radio net when you are not an active member of that net. CUE can be used if you have missed your primary net's opening or if you need an ERF. CUE may also be used if you need to be a member of an alternate net or if you are operating a SC radio and wish to contact a FH net.

CUE procedure. Refer to the local SOP for COMSEC procedures.

a. Set COMSEC to [PT].

b. Set CHAN to CUE. Make sure CUE channel is loaded (if it is not loaded, do the loading procedures on page 2-33).

c. Set RF to HI.

- If you are using a long range RT, set RF to PA.

d. Adjust VOL as needed.

e. Press handset push-to-talk. Repeat this step if necessary; wait 15 seconds between tries. NCS or designated member will contact you on CUE frequency.

LATE NET ENTRY

Two methods can be used to join a net that is already operating; passive and CUE and ERF.

PASSIVE.

a. Set CHAN to channel having proper preset.

b. Set other switches for normal FH operating positions.

c. Press FREQ.

F234

FREQ PRESSED

d. Press SYNC (late entry).

LF234

SYNC PRESSED; RT IN LATE ENTRY STATUS

e. Monitor the channel for at least 3 minutes. (Do not press PTT.)

f. Contact the net when traffic is heard. When a net signal is received, late entry is cancelled; L disappears from display when FREQ is pressed.

- When traffic is heard, call the net.
- If contact is not made, perform CUE and ERF, page 2-46.

LATE NET ENTRY Continued

CUE AND ERF. This method of late net entry is to be used when the passive method did not work, or when you require additional FH to enter a net.

a. Load CUE frequency of the net to be entered. Set CHAN to CUE, and FCTN to LD.

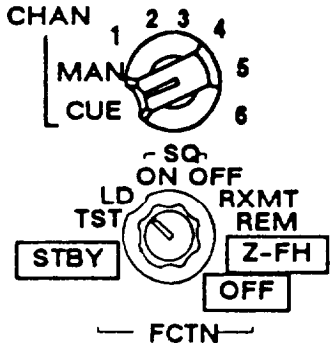

b. Load MAN frequency of the net to be entered. Set CHAN to MAN, leaving FCTN at LD.

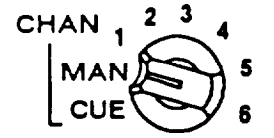

c. Set RF Power to HI for manpack and PA for vehicular radio.

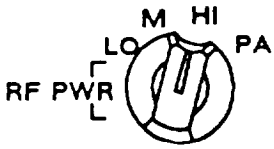

d. Set COMSEC to PT.

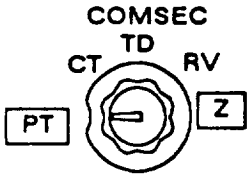

e. Set CHAN to CUE. Press PTT for 4 - 5 seconds.

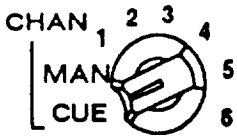

f. Then AT ONCE, set COMSEC to CT and wait for a response.

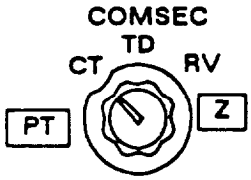

g. Repeat after 15 seconds until CUE call is answered. For each try, go to PT to send CUE and CT to receive reply.

NOTE

CUE call goes through only when the net is quiet. Because you do not know when the net is quiet, the solution is to repeat your CUE call until you get an answer.

h. When your CUE call is answered, wait for instructions from the NCS/Alt NCS regarding net entry and receiving an ERF.

i. Once the ERF is stored, you are ready to enter the net.

JAMMING AND ANTIJAMMING

JAMMING, Jamming is the intentional transmission of signals that interrupts your ability to receive needed signals. Interference is the accidental transmission of signals that also interrupts your ability to receive needed signals. If you are being jammed, it might sound like strong static, misleading signals, or random noise; or the net may be quiet with no signals heard. These signals depend upon the type of jamming signals and whether your net is operating in single channel (SC) or frequency hopping (FH) mode. The source of jamming could be power generators, radar sets, high power HF radio sets, or intentional enemy jammers. Use the following table to determine the possible source of jamming and the corrective actions.

SINGLE CHANNEL OPERATIONS.

SYMPTOM	POSSIBILITIES	ACTION
SIG marker is lit and showing a signal higher than LO. You hear no traffic or noise and you are not transmitting.	(1) You have a bad handset if you disconnect the handset and the lighted signal goes away (stuck or "hot" mike).	(1) Try to free-up the stuck mike by pressing push-to-talk 2 or 3 times. Remove faulty handset and replace with one that is good.
	(2) You are being jammed if you set RT FCTN switch to SQ OFF and hear strong static or random noise. You can confirm this by disconnecting the antenna (MP) or antenna cable (vehicular). The SIG marker will drop and the noise will go away or be reduced.	(2) Change your tactical location. Try to mask your RT/antenna by placing hills, rocks, buildings, etc. between you and the enemy. Notify your supervisor and prepare a MIJI feeder report.
	(3) You may have a faulty or "locked-up" RT if you try removing the handset and the antenna (MP) or antenna cable (vehicular) and the SIG marker remains higher than LO.	(3) Set RT FCTN switch to STBY ; then to SQ ON. If problem still exists, contact unit maintenance.

JAMMING AND ANTIJAMMING Continued

SINGLE CHANNEL OPERATION. Continued

SYMPTOM	POSSIBILITIES	ACTION
SIG marker is lit and showing a signal higher than LO. You hear random radio traffic or radio signals.	You have enemy or friendly radio interference.	Set RT FCTN to SQ OFF and listen for radio traffic. Try to identify a friendly call sign if you can determine friendly signals. If you determine that jamming is from an enemy source, change location and use terrain to mask your RT from the enemy jamming source. Switch to a better antenna (if using manpack, switch to vehicular or OE-254) Contact NCS and your supervisor.
SIG marker is lit and showing a signal higher than LO. The signal marker may light on and off at regular intervals (pulsing) or in a random cycle. You may or may not hear any noise.	(1) You may have enemy sweep jamming.	(1) Set RT FCTN to SQ OFF. You may hear a very high-pitched noise or static each time the SIG marker lights. Use terrain to mask your RT from enemy's suspected location. Contact NCS and your supervisor.
	(2) You have radio or radar interference.	(2) Symptoms and actions are similar to sweep jamming (above), except that signals will be coming from a friendly source (maybe). Use terrain to mask your RT from suspected source location. Contact NCS and your supervisor.

FREQUENCY HOPPING OPERATION.

SYMPTOM	POSSIBILITIES	ACTION
SIG marker is lit and showing a signal higher than LO. The signal marker may light on and off at regular intervals (pulsing) or light steady. There is strong static or noise when you attempt to hear net traffic.	(1) You are being jammed if you disconnect the antenna (MP) or antenna cable (vehicular) and the SIG marker is reduced or drops to LO and the noise is reduced.	(1) Reconnect the antenna. Use terrain to mask your RT from the suspected enemy location. Contact NCS and your supervisor.
	(2) You may be receiving interference from a nearby high-power communication system (this is a co-site problem).	(2) If possible, obtain authorization to have the interferring equipment turned off (this determines if you are receiving interference or if you are being jammed by the enemy). Move away from the source of interference by using terrain to mask your RT from the source. Attempt to remotely locate antenna(s) or RTs, separating antennas at least 50 meters. Use one RT at a time.
SIG marker is lit and showing a signal higher than LO. You hear a constant hiss. or background noise in the handset, but no real noise or radio traffic.	(1) There is a compromised or captured RT in your net. The compromised RT is constantly transmitting to act as a jammer.	(1) Press handset push-to-talk 2 times. If voice or data transmissions return, continue to operate. Contact NCS or refer to SOI. Use authentication procedures.
	(2) There is a stuck mike or bad handset in your net that is locked in the transmit (push-to-talk) position.	(2) Press handset push-to-talk 2 times. Contact NCS. Use authentication procedures.

JAMMING AND ANTIJAMMING Continued

FREQUENCY HOPPING OPERATION, Continued

SYMPTOM	POSSIBILITIES	ACTION
	(3) Your RT has a stuck handset if you speak or blow into the mike and you hear sidetone.	(3) Disconnect handset from RT and the SIG marker drops to LO or below. Press handset push-to-talk several times to free the switch. If you reconnect the handset and the SIG marker lights, replace the bad handset with a good one.
Your net is not in a silence directive and you haven't heard traffic for a period of time.	You RT is out of FH sync time.	Attempt to contact NCS or another member 2 or 3 times. If unsuccessful, perform passive late net entry. If late net entry is unsuccessful, perform CUE and ERF procedure. Follow NCS direction.
SIG marker steadily flickers. You can communicate, but there is background popping or static when you are receiving. You notice your RT communication range is reduced.	Co-site interference from another radio.	If possible, ask the interferring radio operator to stand by or to reduce RF power. Attempt to move your RT or antenna 50 meters or more. Contact NCS.

SECTION V. OPERATOR TROUBLESHOOTING

OPERATOR'S TROUBLESHOOTING CHECKLIST

If you have difficulty communicating, take the time to perform the following checks before you decide that there is something wrong with your radio.

- Make sure you have all switches set properly.
- Check all cable connections to ensure that they are tight.
- Make sure your antenna is properly connected and positioned.
- Try to verify that you have LOS with other stations.
- Change position to see if communications improve.
- If you have not heard traffic in some time, perform passive late net entry.
- Make sure your radio has adequate power (especially manpack).
- Look and see if another net station is co-located in your area (called co-site interference).
- Determine if you are being jammed by the enemy. If so, take appropriate action.
- Should your radio give you a strange, unexplained message which does not automatically clear:

  (1) Set FCTN to STBY , then return to SQ ON. This action may clear your problem.

  (2) If it does not, and the situation permits, set FCTN to Z-FH and wait for GOOD, then to OFF and wait 10 seconds, then back to Z-FH and again wait for GOOD. Now run self-test. If GOOD results, reload radio and re-enter net. If problem still exists, contact unit maintenance.

If you still cannot communicate, there may be something wrong with your radio. However, any one of the above operator troubleshooting actions may put you back into communications. They are well worth trying.

> OPERATORS: Two important rules to follow are:
>
> (1) Never use the "TIME" control!
>
> (2) Never set MODE to FH-M !
>
> (Violating either of these rules can take you out of the net, and possibly stop your entire net from communicating.)

CHAPTER 3
NCS PROCEDURES

		PAGE
SECTION I.	Complete Net Opening Procedures and ERF	3-1
II.	Additional NCS Procedures	3-13
III.	NCS Net Troubleshooting	3-19

SCOPE

Chapter 3 is designed for the NCS. It contains procedures that pertain only to the NCS, including complete net opening instructions. The NCS may find it helpful to refer to the NCS Net Troubleshooting section if net communications have been interrupted, etc.

SECTION I. COMPLETE NET OPENING PROCEDURES AND ERF

ITEM	PAGE
Introduction	3-1
Local Fills	3-3
Lockout Set	3-3
Hopset	3-4
Cold Start TSK	3-5
Checking and Setting FH Sync Time	3-5
NCS Notes	3-8
Summary of Cold Start Nat Opening Procedure	3-9
Cold Start Net Opening	3-10

The net control station (NCS) is responsible for controlling the operations of a net. Net members must understand that they have to carefully follow NCS guidance. If they do not, it may jeopardize a mission.

NCS responsibilities include:

1. Opening and closing a net.
2. Maintaining net discipline.
3. Controlling net access.
4. Knowing who is a member of the net.
5. Imposing net controls.

INTRODUCTION. Special data are used by the RT to operate in FH mode. Items 1 thru 4 must be the same in each net RT for net stations to communicate in FH mode. Refer to the glossary (page E-3) for definitions as needed.

1. Cold start TSK. Transmission security (TRANSEC) key (TSK) used for cold start net openings, Operator loads TSK into channel 1. RT then automatically loads MAN channel (also called channel 0) with TSK.

2. Lockout set data (when needed) is loaded from an ECCM fill device or by ERF.

3. Hopset data. Hopsets are loaded into the RT by a fill device or ERF.
4. FH sync time is loaded by transmission from the net controller radio during ERF or by an NCS using keyboard actions.
5. MAN frequency is loaded into the MAN channel by keyboard actions. The MAN channel is primarily used for cold starts.
6. CUE frequency is loaded into the CUE channel by keyboard actions. It enables stations not in a FH net to "CUE", or contact the FH net.

* (Note: Lockout set data are normally built-in to hopsets during the computer generation process. Only rarely will an NCS need to load or ERF a lockout set. Procedures are addressed in this chapter in case they are required on rare occaision. If a lockout set is needed, it will be generated at division, corp or separate brigade level and distributed by fill device.)

WARNING

RF ENERGY IS PRESENT NEAR THE ANTENNA DURING TRANSMISSION. MAINTAIN AT LEAST 30 INCHES BETWEEN VEHICULAR ANTENNA AND PERSONNEL DURING TRANSMISSIONS.

The NCS opens a FH radio net. The procedure used for opening a net Is called cold start net opening. Check the following table to determine what FH data is needed before a net opening. If net is to be opened in CT, refer to pages 2-38 and 2-39.

	COLD START					
	1	2	3	4	5	6
NCS	•	•	•	•	•	•
MEMBER	•					•

NOTE

Only members designated by the commander need to load CUE frequency. However, NCS and alternate NCS should load CUE.

1. Cold start TSK
2. Lockout set(s) (rarely required)
3. Hopset (s)
4. FH sync time
5. CUE frequency (enables contact with FH net if commo is lost)
6. MAN frequency

LOCAL FILLS

LOCKOUT SET. Loading Lockout Set (local fill). Check the SOI for required lockout set(s).

CAUTION

DO NOT CONNECT FILL DEVICE DIRECTLY TO RADIO AUD/FILL CONNECTOR. CONNECTOR DAMAGE MAY OCCUR IF FILL CABLE IS NOT USED.

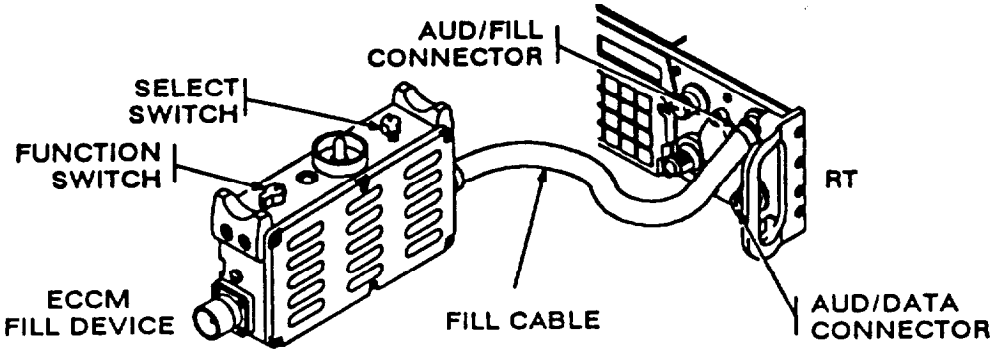

Fill Device Connected to RT Using Fill Cable

a. Make sure that the ECCM fill device is loaded. If the ECCM fill device needs to be filled, see Chapter 4.
   - Check to see if the lockout set(s) have already been loaded in RT: Set RT FCTN to SQ ON, RT MODE to FH (if NCS, set MODE to [FH-M]), CHAN to channel where hopset is stored; then press RT FREQ several times. Watch display for lockout set numbers.

b. Set ECCM fill device function switch to OFF.

c. Connect ECCM fill device to RT connector AUD/FILL using fill cable.

d. Set RT FCTN to LD.

e. Set RT MODE to FH.

f. Set RT CHAN to MAN or channel 1 thru 6.

g. Set ECCM fill device select switch to position containing the lockout set.

h. Set ECCM fill device function switch to ON.

i. Press LOAD. Display cycles as shown.

j. Press STO. Display blinks and shows "STOL" followed by the first digit of the lockout number. The lockout set is now stored in RT permanent memory.

   * If additional lockout sets are to be loaded, repeat steps a thru j for each.

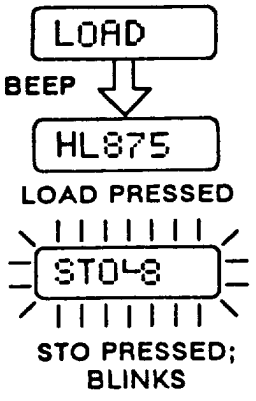

k. Set ECCM fill device function switch to OFF.

l. Disconnect ECCM fill device from RT connector AUDIFILL.

m. Set RT switches as needed for normal operation.

LOCAL FILLS Continued

HOPSET. Check the SOI for required hopsets.

a. Make sure that the ECCM fill device Is loaded.
   - If the ECCM fill device needs to be filled, see Chapter 4.

b. Set ECCM fill device function switch to OFF.

CAUTION

DC NOT CONNECT FILL DEVICE DIRECTLY TO RADIO AUD/FILL CONNECTOR. CONNECTOR DAMAGE MAY OCCUR IF FILL CABLE IS NOT USED.

c. Connect ECCM fill device to RT connector AUD/FILL using fill cable.

d. Set RT FCTN to LD.

e. Set RT MODE to FH, CHAN to normal operating position.

f, Set ECCM fill device select switch to position containing the hopset.

g. Set ECCM fill device function switch to ON.

h. Press LOAD. Display cycles as shown, and a beep is heard.

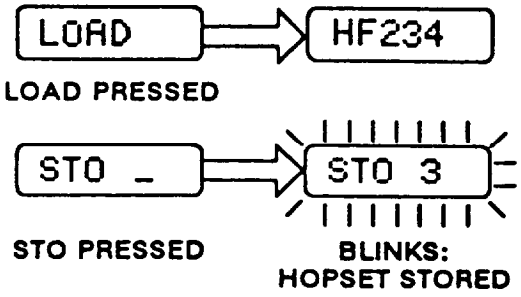

i. Press STO. Display shows "STO".

j. Enter the number of the channel in which the hopset Is to be stored (1 - 6). Display blinks and shows "STO" followed by the channel number in which the hopset was stored.

   - If additional hopsets are to be loaded, repeat steps a thru j for each.

k. Set ECCM fill device function switch to OFF.

l. Disconnect ECCM fill device from rt connector AUDIFILL.

m. Set RT switches as needed for normal operation.

COLD START TSK (LOCAL FILL)

A cold start TSK must be loaded into the MAN channel before it is possible to perform cold start net opening. The TSK determines the starting point at which the RT frequency hops. A TSK is loaded locally with an ECCM fill device. Use the procedure for loading a hopset to load your RT with the TSK. If MAN channel does not have a TSK loaded into it, the RT will use the TSK present in channel 1. If a TSK is not loaded in either MAN or channel 1, cold start is not possible. See page 3-4.

LOADING FH SYNC TIME

FH sync time is used during FH operation. NEVER confuse FH sync time with the time of day. There are seven separate clocks inside the radio. There is a base clock, and a clock for each CHAN setting (1 - 6). MAN and CUE settings will display the base clock time.

When time is first loaded into the radio (cold start ERF, or manually), all seven clocks are set to the same time, When an ERF is received into a specific channel, the sender's net time is also received and stored in the channel with the hopset (it must be within one hour of base clock time already in the radio). Whenever FH sync time is loaded using the keyboard, ALL of the clocks in the radio are reset to the base clock's time. It is not possible to reset the net time for only one channel manually. This can only be done using ERF.

Updating the FH sync time is done automatically each time a message is received from the NCS. The NCS must be an active member of a FH radio net so that member's radios are updated (NCS is the time standard for net). If you are a member of more than one net, it is important that you communicate with the NCS daily.
To find the time of a specific net (monitoring FH sync time of other nets), set the CHAN to the position where the net's hopset is stored; then press ●●●/TIME. The display will show that net's time. It is possible to check the time of a net while operating in a different net: Enter the number of the channel (1 - 6) on the keyboard while the time of your operating net is on display. The display will change to that net's time.

SYNC TIME DIFFERENCES

plus or minus 4 seconds	plus or minus 1 minute	1 to 59 minutes
normal FH	May use passive late net entry to gain normal FH operation.	May use CUE and ERF to gain normal FH operation.

LOADING FH SYNC TIME BY ERF.

a. Prepare NCS radio to receive an ERF.
b. Request, or stand by for, an ERF from higher level NCS.
c. Store ERF in one channel (eg, Chan 2). Read "HF xxx" and blink in display. Press STO, read "STOW", press 2. ERF is now stored in Channel 2.
d. Now store ERF in own unit channel (eg, Chan 1). Set MODE to FH-M and CHAN to 2. Press LOAD, read "HLD _". Press 2, read "HFxxx". Press STO, read "STO_", press 1. ERF from higher NCS is now also stored in unit operating channel.
e. Change net ID of ERF in Chan 1 to that designated for own unit (either by keypad or use of fill device).

NOTE

NCS radio is now ready for own unit net opening. By loading sync time by ERF, the higher net, your own NCS radio, and your unit operators now all have the same sync time. This fact makes cross-net communications easy. This same procedure can also be used for net updates.

LOADING FH SYNC TIME BY KEYPAD. If RT FCTN had been set to Z-FH all time functions must be set manually or by ERF; otherwise, the clock will not start.

a. Obtain net's time standard; then set FCTN to LD.
b. Load and store days (last two digits of Julian date, page A-2):

(1) Press TIME (display will show current days).

(2) Press CLR (display will show two lines).

(3) Load new days (press number buttons for new days, display will show new days).

(4) Store new days (press STO button, display will blink and show new days).

c. Load and store hours and minutes:

(1) Press TIME twice (display shows current hours and minutes).

(2) Press CLR (display shows four lines).

(3) Load new hours and minutes (press number buttons for new hours and minutes). Display stays on for approximately 62 seconds, or until STO is pressed in step c(4).

(4) Store hours and minutes (press STO to store hours and minutes and to reset seconds; display blinks).

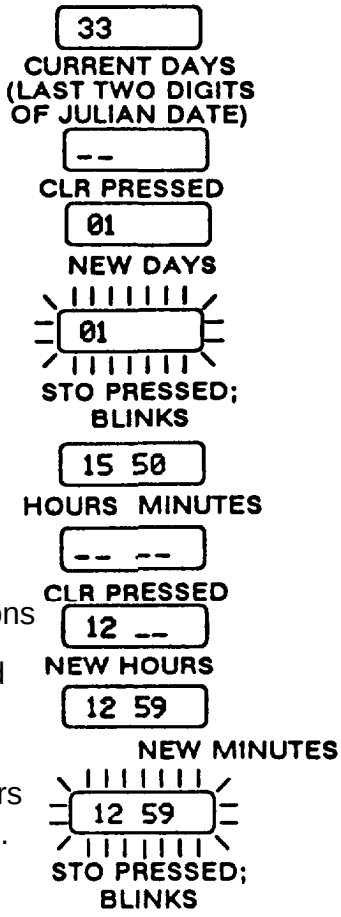

d. NCS may also obtain a sync time by ERF.

CHECKING FH SYNC TIME.

a. Set FCTN to SQ ON.

b. Press TIME three times. Each press will give you a different display:

- Refer to the Julian date calendar as needed, page A-2.

1ST PRESS	2ND PRESS	3RD PRESS
33	15 50	50 59
DAYS (LAST TWO DIGITS OF JULIAN DATE)	HOURS MINUTES	MINUTES SECONDS

COMPLETE NET OPENING PROCEDURES AND ERF

SPECIAL INSTRUCTIONS.

- Do not transmit with the RF switch set higher than authorized.
- If you are using a control-monitor, refer to page 4-1 for information.
- Make sure that net members understand that they are to do only what the NCS tells them to do.

NCS NOTES

- It is extemely important that you consider LOS (line-of-sight) when setting up a net. Radio signals cannot go around corners or transmit out of a valley to a flat plain or vice versa. You must be aware of man-made obstacles such as tall buildings and power lines as well as natural obstacles such as mountains and dense jungle areas. You should also be aware of distance (range) due to the curvature of the earth. LOS simply means that your RT antenna must be able to be seen by the antenna of the RT that will be transmitting or receiving your signal.

- A cold start net opening should be used to initially open a net. It Is used when all radios in a net have the same cold start TSK, MAN frequency, CUE frequency, hopset(s) and lockout set(s). The NCS will ERF FH sync time to all net members. If net is to be opened in CT, refer to pages 2-38 and 2-39.

- The use of COMSEC and TRANSEC fill devices may be limited to communications personnel and unit NCO's to reduce the incidence of operator loading errors.

- Make sure that you and the members of your net release the handset push-to-talk as quickly as possible after you've finished talking. Before answer ing a call, make sure that you wait 2 or 3 seconds after pressing handset push-to-talk before responding.

- Only one hopset or lockout set can be in holding memory at one time. Only one hopset can be sent at one time.

- A retrieved hopset does not have to be stored back into permanent memory. To clear the display of a hopset or lockout set in holding memory, move FCTN to position other than LD.

- Make sure that you allow enough time between steps for members to do what you've instructed them to do.

- The MAN channel is the net's communication channel during a cold start net opening. Make sure that members know to set CHAN to MAN if contact is lost.

- When operating from a location or vehicle having multiple radios, make maximum possible use of OE-254 antennas at greatest attainable distances.

SUMMARY OF COLD START NET OPENING PROCEDURE

Use this summary after you've become familiar with the detailed cold start procedure (pages 3-10 and 3-11). This summary is for quick reference.

WHAT NCS DOES	WHAT NET MEMBERS DO
a. Set FCTN to LD.	a. Set FCTN to LD.
b. Set MODE to FH-M.	b. Set MODE to FH.
c. Set CHAN to MAN. Display will show "COLD."	c. Set CHAN to MAN. Display will show "COLD."
d. Contact members.	d. Acknowledge NCS call. The NCS will transmit the ERF to your radio.
e. Tell members to stand by for cold start, and which channel hopset is to be stored. Tell them to acknowledge reception and storage of ERF when it is finished. (ERF contains hopset, hopset ID, lockout set, and FH sync time).	e. Non-applicable.
f. Retrieve hopset (press LOAD, enter channel number).	f. Non-applicable.
g. Send hopset. (press ERF).	g. Upon reception of ERF, press STO; then enter the channel number (on keyboard) where it is to be stored.
h. Tell members to set CHAN to where ERF was stored.	h. Set CHAN to channel where ERF was stored.
i. Set your CHAN to channel where ERF was stored.	i. Non-applicable.
j. Contact members and confirm communication on ERF channel.	j. Confirm communication on ERF channel.
k. Repeat steps e thru j for additional ERF(s).	k. Non-applicable.
l. Set FCTN as needed.	l. Set FCTN as needed.

COMPLETE NET OPENING PROCEDURES AND ERF Continued

COLD START NET OPENING. The following steps are designed for the NCS. Detailed member procedures are provided in Chapter 2. Check SOI for authorized operating frequencies.

a. Make sure that your RT has the following FH data loaded (also make sure that each member has the same FH data loaded in member radio):

- MAN channel frequency.
- CUE channel frequency.
- Lockout set(s), if needed.
- Cold start TSK loaded into channel 1 or MAN channel (automatically loaded into MAN channel when hopset is loaded into channel 1).
- Hopset. If the display shows "L7" or "L8", you are missing mandatory lockout set(s).
- Load TEK and KEK as needed. If COMSEC keys are required and MAN channel is being used, the COMSEC key used will default to the TEK in channel 5.

b. Load hopset(s). NCS will send ERF for to member RT (when hopset is ERFed, net member also receives hopset ID and FH sync time).

c. Load FH sync time (FH sync time may be entered into your RT by keyboard entries or obtained through an ERF by higher headquarters net)NCS will ERF FH sync time to member RT.

d. Set CHAN to MAN, MODE to [FH-M], COMSEC to CT or [PT] as local SOP dictates.

e. Contact net members and confirm communication.

f. Tell members to set FCTN to LD. Have members stand by for cold start net opening.

g. Before transmitting the ERF, tell members:

(1) In which channel you wish them to store ERF.

(2) To confirm their reception of the ERF and to confirm that it has been stored.

h. Retrieve and send ERF to net members:

(1) Make sure that FCTN is set to LD.

(2) Press LOAD.

(3) Enter number of channel where ERF is stored (display will show "HF" followed by hopset ID, display will blink, and beep will be heard).

(4) Press ERF (display will show "SEND", and beep will be heard). The hopset for FH sync time has now been transmitted (member receives hopset, hopset ID, and FH sync time).

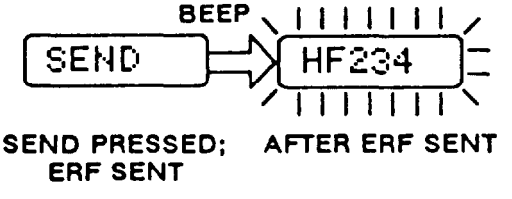

COMPLETE NET OPENING PROCEDURES AND ERF Continued

i. After transmitting ERF, members will confirm their reception and storage of hopset for FH sync time (sent to them in step h; display will change as shown, beep will be heard).

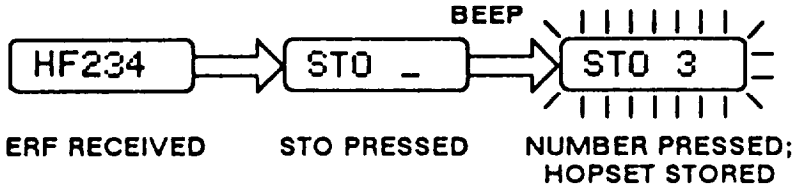

j. Tell members to set CHAN to channel where ERF was stored (channel number sent In step h), and stand by.

k. Set CHAN to channel where ERF was stored (channel number given In step g). Display will show hopset ID.

i. Confirm communication with each net member on hopset channel.

m. Repeat g thru i for additional hopset(s).

n. Tell members to set FCTN to SQ ON (or normal operating position).

- If a member was "lost" during ERF, do the following:

  (1) Tell other members to stand by (have alternate NCS control net operation while you are out of communication): then set CHAN to MAN and repeat steps g thru I.

  (2) If contact was not made in step 1, set CHAN to channel where you last had communication with the lost member (net members are instructed to monitor the MAN channel and wait for NCS to find them).

SECTION II. ADDITIONAL NCS PROCEDURES

ITEM	PAGE
FH Update Using ERF	3-13
Bringing Another Station Into The Net	3-14
Changing Hopset Identification (ID)	3-15
Monitoring FH Sync Time of Other Nets	3-16
COMSEC Key Loading (Remote Fill)	3-16
Jamming and Antijamming	3-16

FH UPDATE USING ERF

This procedure is used to update hopsets and lockout sets during net operations. It can also be used to add new sets. During an update, the net communicates on the FH channel it has been using.

SPECIAL INSTRUCTIONS

- The NCS must load and store the data before doing this procedure. However, new lockout sets must be loaded into NCS radio holding memory, ERFed to member; then stored in NCS and member radios.
- During an update, the CHAN switch must remain on the same setting. You must not change the CHAN setting until all updating is complete.
- The NCS must retrieve and send lockout sets first; then retrieve and send hopsets.
- To ensure continued communications, it is best to store an update hopset in an empty channel.
- If NCS is loading new lockout set: (1) load it into holding memory, (2) ERF to members, and (3) store.

FH UPDATE USING ERF. If more than one hopset is needed, repeat steps b thru h for each.

a. Set FCTN to LD. Leave all other switches as they have been for past communications.

b. Contact net members.

c. Tell net members to stand by for update, and in which channel the data is to be stored. Tell them to acknowledge reception and storing only after it is finished.

d. Retrieve required set from RT permanent memory:
   - For lockout set: Press LOAD.
     Press LOUT.
     Enter number (first digit of lockout set).
   - For hopset: Press LOAD.
     Enter channel number (1 - 6).

e. Transmit ERF: Press ERF; then resume normal net operation.

f. Tell members to set CHAN to where updated hopset was stored.

FH UPDATE USING ERF Continued

g. Set CHAN to new hopset channel.

- If FH update is being done in CT, you (and members) must scroll to net's operational TEK, page 2-39, or have TEK loaded into channel selected for up date. Communication is not possible on updated channel if TEK is not loaded.

h. Contact members on new hopset.

i. Tell members to set FCTN to normal operating position.

BRINGING ANOTHER STATION INTO THE NET

When you receive a CUE call (on display), perform the following procedure to bring an outsider into your net. (If possible, have alternate NCS or another designated station answer CUE call. If this is not possible, have alternate NCS control net while NCS is out of the net to respond to the call.)

NOTE

CUE caller must have same TSK and KEK (or TEK). If caller only has TSK, ERF is possible using PT.

a. Tell the present members of your net to stand by (have alternate NCS control net operations while you are out of communication).

b. Set CHAN to CUE: then set COMSEC to PT , or as local SOP dictates.

c. Respond to CUE caller.

d. Establish communication with CUE caller.

e. Tell caller:
- Set COMSEC to CT.
- Set CHAN to MAN.
- Set FCTN to LD.
- Set MODE to FH.
- Channel in which hopset is to be stored.
- Acknowledge when ERF has been received and stored.

f. Reset COMSEC to CT, MODE to FH-M , and CHAN to MAN.

g. Retrieve and send lockout set (if needed). Lockout set(s) must be sent before hopset:
(1) Press LOAD.
(2) Press LOUT.
(3) Enter the first digit of lockout set number.
(4) Press ERF.
(5) Confirm caller's reception of lockout set.
(6) Repeat this step for additional lockout set(s) if they are needed.

BRINGING ANOTHER STATION INTO THE NET Continued

h. Retrieve and sand hopset:
   (1) Press LOAD.
   (2) Enter channel number where hopset is stored.
   (3) Press ERF.
   (4) Confirm caller's reception and storage of hopset.
   (5) Tell caller to set CHAN to where hopset was stored.
   (6) Confirm communication in FH mode.
   (7) Repeat this step for additional hopset if they are needed.

i. Tell new member to set FCTN to SQ ON (or normal operating position).

j. Set FCTN to normal operating position.

CHANGING HOPSET IDENTIFICATION (ID)

Changing FH Hopset ID. When needed and authorized, the FH hopset ID can be changed. The following procedure is to be performed only at the direction of the NCS.

NOTE

When needed, it is possible to copy the hopset ID that is present in one channel into another channel: Set FCTN to LD, press LOAD, enter channel number where hopset is stored, press STO; then enter the channel number in which it will be copied. If the hopset ID must be changed, perform the following procedure.

a. Set FCTN to LD.

b. Set MODE to FH-M .

c. Set CHAN to channel where the hopset ID is stored that needs to be changed.

d. Press FREQ (display will show old hopset ID).

F234
FREQ PRESSED

e. Press CLR (display will show that the last two digits have been cleared).

F2__
CLR PRESSED

f. Enter next to last digit of new hopset ID.

F27_
NO. PRESSED

g. Enter last digit of new hopset ID.

F278
NO. PRESSED

NOTE

The old hopset ID will be cleared when step h has been done. If you need to restore the original hopset ID, press FREQ, CLR, and enter the last two digits of the original hopset ID.

h. Press STO (display will blink, and the new hopset ID is stored).

MONITORING FH SYNC TIME OF OTHER FH NETS

Monitoring FH Sync Time. This procedure allows you to check the FH sync time of other active FH nets in your RT ("other active" FH nets are those you have entered besides your own net). Monitoring FH sync time is useful when you suspect that you have dropped out of another net and you wish to check the time of that net. If you find that your time is out of sync with the other active net, you may perform passive late net entry. If late net entry is not successful, perform CUE and ERF procedure.

Checking FH Sync Time.

a. Press TIME.
b. Enter number of channel for "other active" FH net (display will change to show other net's FH sync time).
   - To view your RT base clock FH sync time, set CHAN to MAN (or empty channel); then press TIME as needed.

COMSEC KEY LOADING (REMOTE FILL)

LOADING COMSEC KEY (REMOTE FILL). In this procedure a COMSEC key (TEK) .is transmitted from net control station to net member stations. Refer to the following illustration as needed.

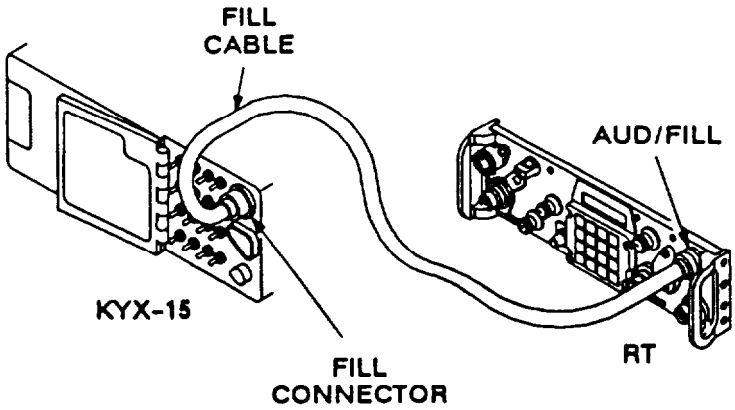

KYX-15 Connected to RT

NOTE

Steps marked NCS are done only by the net control station. Steps marked member are done only by the net member stations. Members must have a KEK loaded (in channel 6) in their RT to be able to receive a remote fill.

REMOTE FILL OF COMSEC KEY

NCS	MEMBER
a. Tell members to set FCTN to LD and COMSEC to CT; then set COMSEC to CT.	a. Set FCTN to LD, COMSEC to CT.
b. Set FCTN to LD. Contact net member(s) using secure communications and tell them to set COMSEC to RV and stand by.	b. Set COMSEC to RV and stand by. (When COMSEC is set to RV and FCTN is set to LD, the channel cannot be changed, or display will show "ERROR".)
c. Set COMSEC to RV; then connect KYX-15 to radio AUD/FILL connector.	c. Not applicable.
d. Set KYX-15 toggle switch to position containing KEK of member(s) to ON. Set all other toggle switches to OFF; then set KYX-15 MODE switch to LD.	d. Not applicable.
e. Press radio LOAD. Two beeps will be heard and KYX-15 indicator light will flash.	e. Non-applicable.
f. Tell member(s) to scroll to COMSEC key position to be filled.	f. Press CMSC; then CHG until position to be filled is displayed. Inform NCS when ready.
g. Tell member(s) to wait for burst of noise and beep; then to wait 2 seconds and set COMSEC switch to CT.	g. Stand by.
h. Operate KYX-15 for MK. Refer to KYX-15 operator's manual.	h. When burst of noise and beep are heard, set COMSEC to CT.
i. Press STO (STO x) to store COMSEC.	i. Non-applicable.
j. Set radio COMSEC switch to CT; then confirm communications with member(s).	j. Confirm communications with NCS.

JAMMING AND ANTIJAMMING

SINCGARS is jam-resistant due to its frequency hopping capability. Also, hopsets have been designed to reduce the effects of jamming. However, in the event that SINCGARS is jammed, it may be necessary for you to take corrective actions. The action you take depends on the type of jamming or interference that is disrupting net communication as well as the authorized FH hopset that is available to your net. A table is provided for the operator on pages 2-47 thru 2-50 that lists symptoms, possiblities, and corrective actions to be taken.

NOTE

Keep it simple. If possible, make no changes to communication during engagement or hostile action. In a hostile battlefield environment the enemy may employ electronic warfare Electronic Countermeasures (ECM) techniques in an attempt to halt or disrupt your communications. You must be able to identify jamming techniques and know how to counter them when necessary.

The simplist method the enemy can utilize to disrupt your communication is to transmit noise or audio signals on your single channel operating frequency, or on multiple FH frequencies during FH operation. If the enemy can generate enough power on your hopset, it is possible that your communication capability will be disrupted or even stopped. One of your most difficult tasks is to identify jamming signals. Refer to the following procedures when a member reports jamming problems or when you determine you are being jammed. Different jamming situations require different antijamming procedures.

SITUATION: Your net has been operational and communications has been good with all stations. The next time stations report, you suddenly receive a great deal of noise and are unable to hear several of net members. You receive noise even though no real communication is occurring: a nearby member reports noise reception. You are probably being jammed. Perform the following steps to confirm and counter jamming:

a. Disconnect antenna. This determines if the noise is internal or external to your radio. If the noise continues, your radio may be faulty.
b. Check power supply, RT and antenna ground. A bad ground can conduct noise into the RT.
c. Move or reposition the antenna. If communications improve, you probably are not being jammed.
d. Notify your supervisor of suspected jamming signals.
e. Increase RF power.
f. CONTINUE TO OPERATE! Do not discuss the jamming problem over the air.
g. Increase antenna height.
h. Update the net. Changing the hopset may eliminate disruptions.

SITUATION: The enemy may employ what is referred to as subtle jamming. Subtle jamming is more difficult to detect than noise-generated signals. You will not hear any noise or incoming signals and even though everything seems to be normal, communication is disrupted. Follow the same antijamming procedures listed above. Again, CONTINUE TO OPERATE and DO NOT discuss suspected jamming over the air. Begin antijamming as SOP dictates.

SECTION III. NCS NET TROUBLESHOOTING

NCS TROUBLESHOOTING CHECKLIST

The NCS's biggest responsibility is to ensure uninterrupted communications (regardless of operational conditions or other requirements). At times, radios will not respond as they should. NCS guidance to operators should emphasize the importance of trying the operator troubleshooting checklist before reporting a technical problem with the radio. Likewise, NCS operators can keep communications flowing by taking any or all of the following NCS troubleshooting steps.

- Check your radio(s) using the operator checklist.
- Ensure NCS station has LOS (line-of-sight) with at least one net member. As the situation permits, move your station as required to establish LOS with all stations.
- Make sure all stations have the most recent update (FH data). Call missing stations using old preset if appropriate.
- Check distance of forward stations to ensure that they are still within the SINCGARS voice/data range. If not, consider a RXMT mission to regain contact.
- Ensure that you transmit often enough to keep all member stations in time synchronization.
- Make sure that your radio is the only one in the net set to FH-M . Especially check alternate NCS stations to ensure that they have returned to FH after answering a CUE call.
- Be alert to CUE calls from other commanders, aircraft, and various support elements. Ensure that you or an alternate NCS responds quickly, helps the calling station enter the net, and minimizes interference with net operations.
- If the enemy has demonstrated direction finding capabilities, make sure you or an alternate NCS station displaces after each use of single channel communications.
- Be alert to co-site interference; take immediate action if it occurs.
- Respond to enemy jamming quickly: Alert the net and help members work through jamming to continue communications.

CHAPTER 4
OTHER OPERATING PROCEDURES

		PAGE
SECTION I.	Control, Receiver-Transmitter (RCU) C-11561 (C)/U	4-1
II.	Control-Monitor (CM)	4-9
III	ECCM Fill Device	4-13
IV.	Operation With External Equipment	4-15
V.	Additional Operating Procedures	4-20
VI.	Operation Under Unusual Conditions	4-27

SCOPE

This chapter is applicable to operators and NCS. Chapter 4 contains operating procedures for equipment other than the radio. It also contains operating procedures for retransmit and scanning. Also included in this chapter is Operation Under Unusual Conditions, such as unusual weather, fording, and emergency procedures.

SECTION I. CONTROL, RECEIVER-TRANSMITTER (RCU) C-11561 (C)/U

ITEM	PAGE
Introduction	4-1
Operator's Controls, Indicators, and Connectors	4-2
Operation	4-3
Operational Notes	4-3
ICM (intercom)	4-4
Self-Test	4-4
RCU Cabling	4-5

INTRODUCTION. The RCU provides remote control of radio. It also provides secure communication compatible with all configurations (manpack and vehicular). Many of the RCU features and operations are identical to the radio. Refer to the following illustration of the RCU front panel as needed.

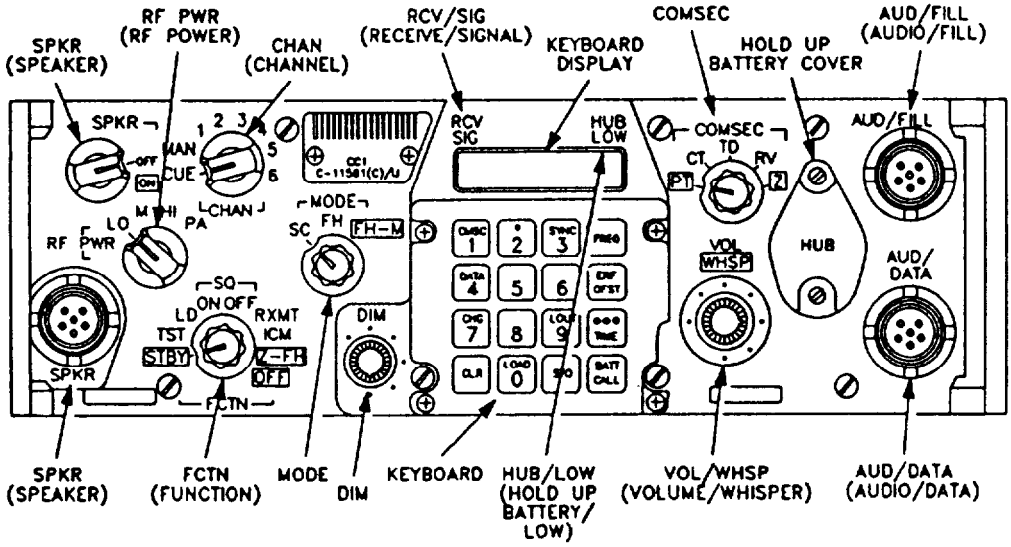

RCU Front Panel

OPERATOR'S CONTROLS, INDICATORS, AND CONNECTORS

The RCU controls, indicators, and connectors are identical to those on the RT-1523 (C)/U with the following exceptions (refer to the RCU front panel, page 4-1).

CAUTION

LOUDSPEAKER LS-685/U IS FOR USE WITH CONTROL, RECEIVER-TRANSMITTER C-11561 (C)/U. ATTEMPTED USE WITH ANY OTHER EQUIPMENT MAY RESULT IN PERMANENT DAMAGE TO THAT EQUIPMENT.

SPKR switch. Controls whether or not loudspeaker LS-685/U is ON or OFF. SPKR should be set to OFF if loudspeaker is not used. Loudspeaker is disabled when WHSP function is used. Set to OFF whenever possible to conserve manpack battery life.

FCTN switch. Sets function of RCU. With the exception of the ICM position, the RCU and radio FCTN switches are identical. ICM position allows operator to communicate with companion radio without transmitting a signal (COMSEC switch MUST be set to PT) . TST position tests RCU and radio circuits.

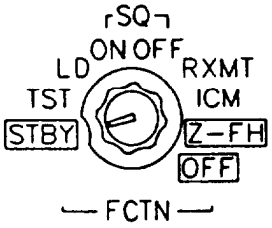

CHAN switch. Selects manual, 1 - 6, and CUE frequencies. Selects FH hopset.

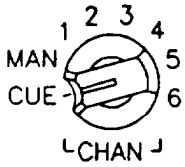

RCV/SIGNAL (receive/signal) display. Lights when companion radio receives signal.

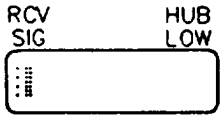

HUB Indicator. Only shows HUB life of RCU.

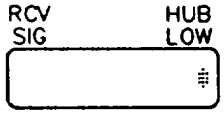

BATT/CALL (battery/call) button. Used to check battery life condition of manpack RCU and manpack radio. The first press indicates the battery life condition of the manpack RCU. The second press indicates the battery life condition of the companion manpack radio (when checking the manpack radio, the display shows " RT nn"). Also used to create a ring tone ("CALL" is displayed on companion radio) at the companion radio. FCTN switch MUST be set to ICM to use the call function (radio may call RCU regardless of RCU FCTN switch setting).

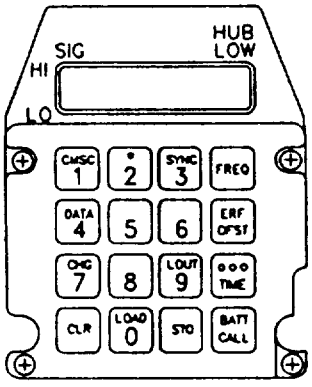

OPERATION

RCU operation is identical to radio operation with a few exceptions. You may: Load or offset SC frequencies, receive or send an ERF, change modes or functions, change channels, select COMSEC keys, select PT or CT operation, select data rates, and clear FH data in the radio, The RCU operation is slower than radio operation. You must wait for for radio signal to reach RCU to continue operation. Otherwise, some keyboard entries, etc. won't be accepted. Carefully read the following notes, determine what procedure you wish to perform: then refer to radio operating procedures in Chapter 2.

OPERATIONAL NOTES

- The radio and battery warnings and cautions at the front of this manual also apply to the RCU. Read them carefully.
- Make sure to perform scheduled PMCS and routine checks as required.
- Set radio FCTN switch to REM AFTER turning on RCU. Data will be lost if radio FCTN is set to REM before RCU is turned on. Use the radio to clear COMSEC keys that are loaded in the radio. If two-wire is cut, disconnected, or radio FCTN switch is not set to REM, RCU display shows "OPEN " . Radio battery life condition must be set at the radio. RCU battery life condition is set at the RCU. RCU data rates are set at the RCU.
- When RCU FCTN is set to STBY , the companion radio also goes to STBY after about 16 seconds. Likewise, if the two-wire is cut or disconnected, the companion radio will go into STBY .
- Local fill of SC and FH data must be done with the radio. ERF may be received using the RCU.
- It is not possible to clear COMSEC keys from radio at RCU.
- Set RCU COMSEC switch to PT when RCU FCTN switch is set to ICM.
- If radio is being controlled by a CM, disconnect CM before using RCU.

INTERCOM (ICM) OPERATION

This mode of operation allows the RCU operator to communicate with the radio operator without transmitting a signal.

a. Set RCU FCTN to ICM.

b. Press CALL button and handset push-to-talk at the same time. The RCU and radio displays show 'CALL" and a two-tone alarm is heard in the RCU and radio handsets. This alerts radio operator that RCU operator wishes to communicate. If either display fails to show 'CALL", try again. If several attempts have failed, turn in RCU and radio to unit maintenance.

c. Press handset PTT and speak.

d. When call is complete, reset RCU FCTN switch to SQ ON or other operating position.

SELF-TEST

The RCU first tests the RCU: then the companion radio (if connected). Always perform self-test before or after a mission.

NOTE

Refer to the radio receiver-transmitter self-test (page 5-4) as needed. The display must show "GOOD" or "OPEN" at the end of the self-test. ("OPEN" display indicates that the two-wire link is cut, disconnected, or the companion radio FCTN switch is not set to REM.)

a. Set RCU COMSEC switch to CT and FCTN to TST.

b. Watch as the displays cycle in the following sequence:

TWO-WIRE CONNECTED TO COMPANION RADIO

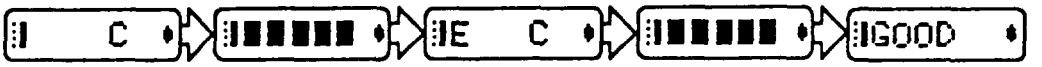

NOTE

"FAIL 9" indicates that self-test was done with the COMSEC switch set to PT. If "FAIL 9" is displayed during self-test when COMSEC switch is set to CT, turn in RCU to unit maintenance. If any other fail display is shown, refer to radio receiver-transmitter self-test. page 5-4. If you cannot operate RCU due to failure, refer to RCU troubleshooting, page 5-15.

RCU CABLING

The RCU and RT are connected by a field wire (two-wire) link and separated up to 4 km. There are four main configurations that may be used:

(1) RCU in manpack, RT in vehicular mounting adapter.
(2) RCU in vehicular mounting adapter, RT in manpack.
(3) RCU in manpack, RT in manpack.
(4) RCU in vehicular mounting adapter, RT In vehicular mounting adapter.

Refer to the following cabling illustrations and perform the following procedure:

a. Assemble vehicular of manpack (of both) as needed, using the vehicular or manpack radio assembly procedures.

NOTE

If you are assembling a manpack, you MUST use Battery Box CY-8523A/PRC.

b. Set RT FCTN to SQ ON; then connect two-wire. The two-wire is connected to battery box binding posts in manpack configurations and to vehicular mounting adapter (E1A/E2A or E1B/E2B, depending on the position of the radio or RCU) in vehicular configurations.

C. Connect handset or external speaker (if used). If an external speaker is connected to an RCU, use LS-685/U (connected to RCU SPKR connector). Refer to RCU front panel, page 4-1.

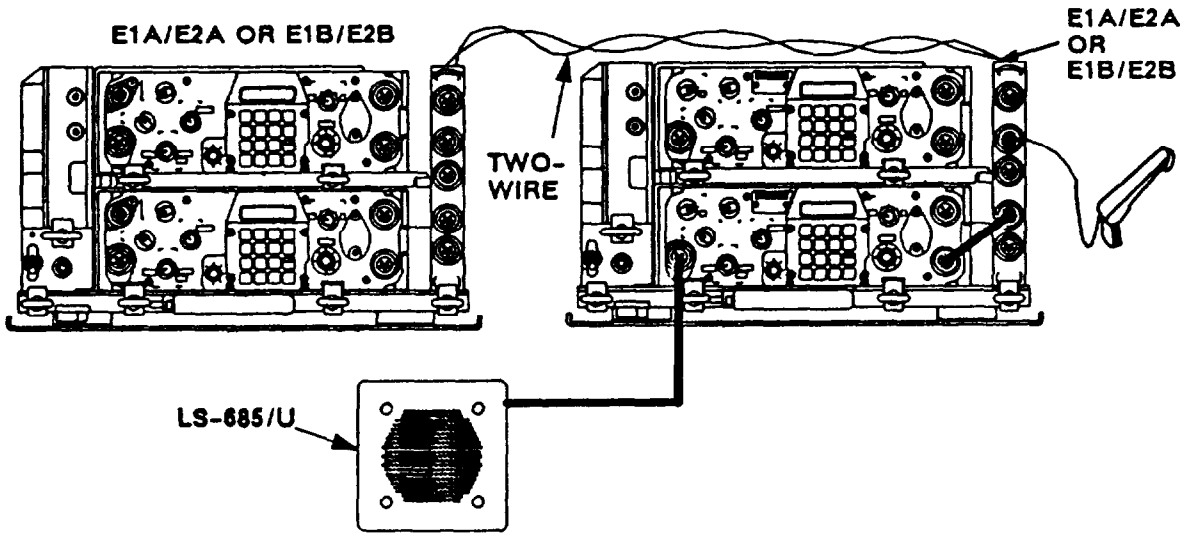

RT In Vehicular Mounting Adapter, RCU in Vehicular Mounting Adapter

RCU CABLING. Continued

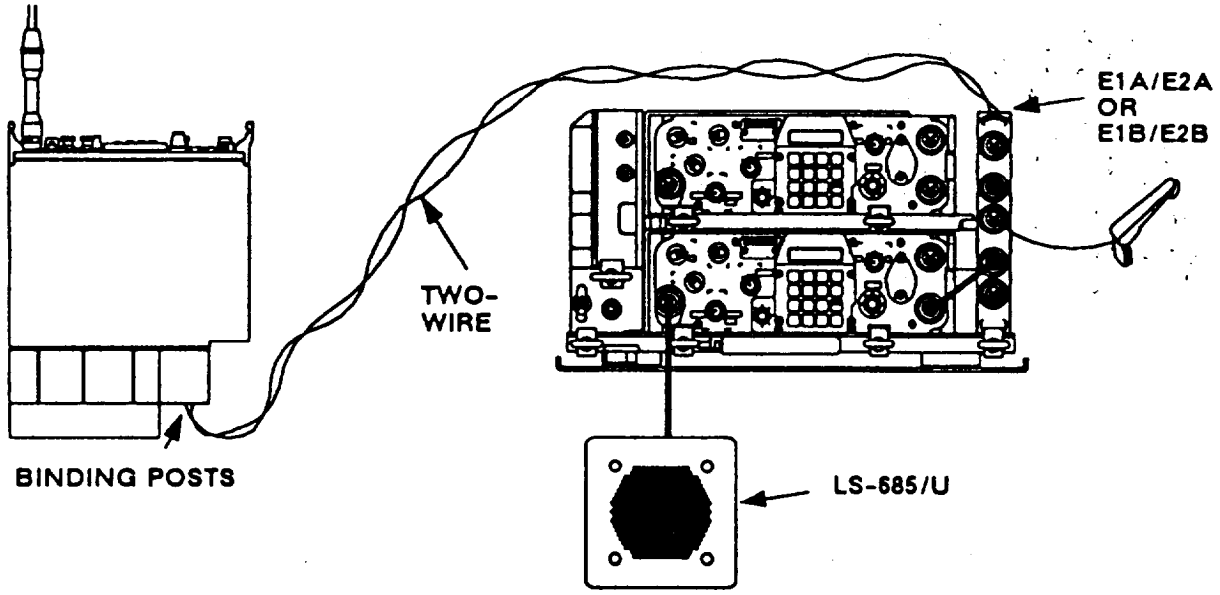

RT in Manpack, RCU in Vehicular Mounting Adapter

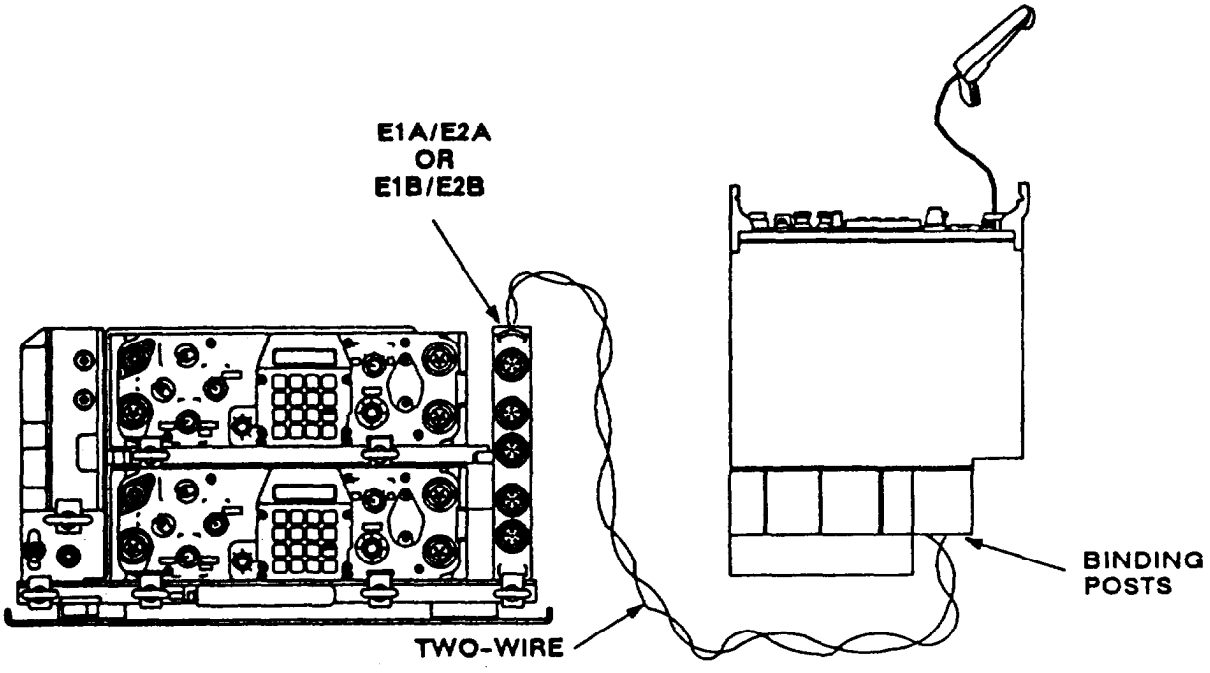

RT in Vehicular Mounting Adapter, RCU in Manpack

RCU CABLING Continued

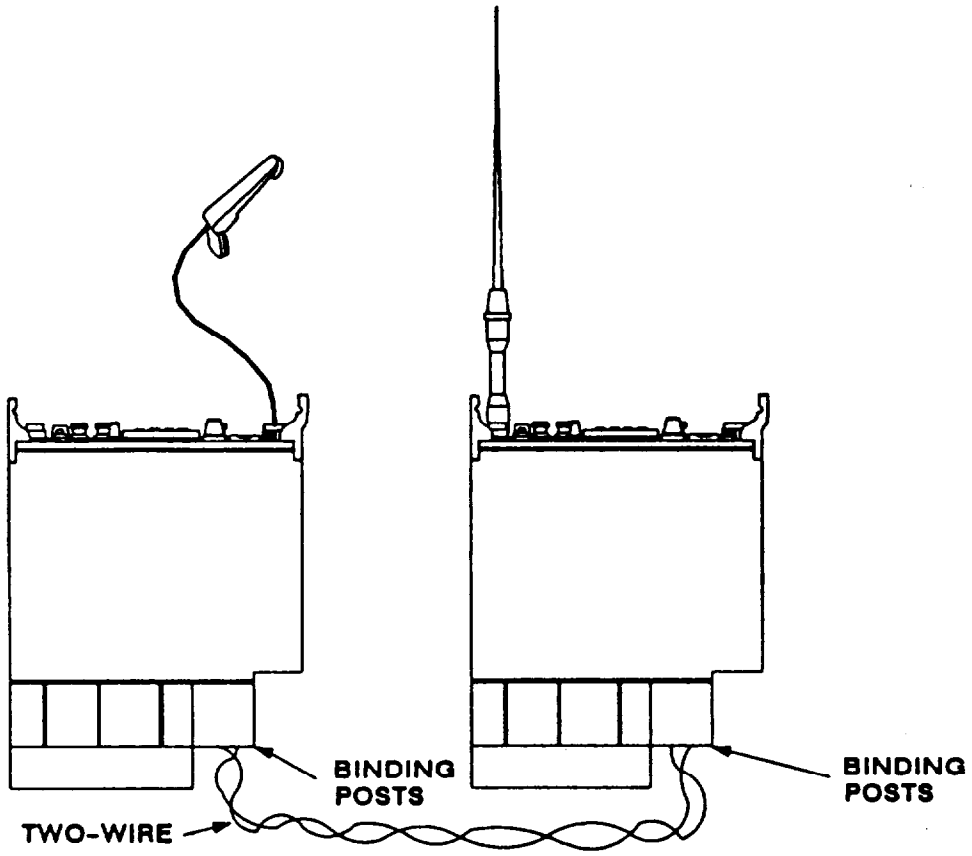

RT in Manpack, RCU in Manpack

SECTION II. CONTROL-MONITOR (CM)

ITEM	PAGE
Operator's Controls, Indicators, and Connectors	4-9
Initial Set-Up and Self-Test	4-10
Setting and Changing RT Functions	4-11
Cabling	4-12

OPERATOR'S CONTROLS, INDICATORS, AND CONNECTORS

Control-monitors are used in some vehicles. They enable the remote control of up to two mounting adapters with up to three RT.

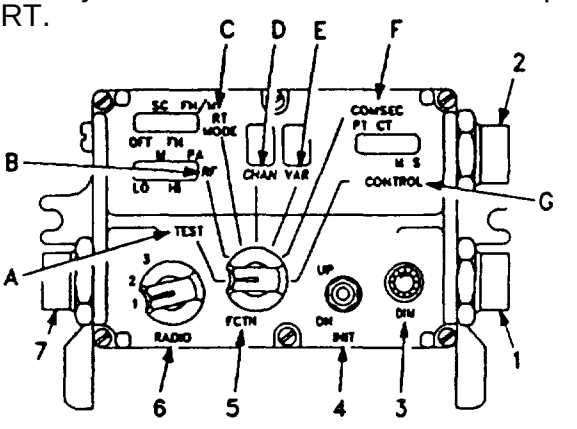

CM (front view)

1. J1 connector. Cabled to main mounting adapter: RADIO switch position 1 selects RT in position A of mounting adapter: position 2 selects RT in position B.

2. J2 connector. Cabled to second mounting adapter (when used); RADIO switch position 3 selects RT in position A of second mounting adapter.

3. DIM control. Adjusts brightness of displays. Turn DIM right (clockwise) to brighten displays; turn it left (counterclockwise) to dim displays. Turn DIM fully left when you are wearing night-vision goggles.

4. INIT (initiate) switch. Used with FCTN switch to change functions of RT and CM. Moving INIT to UP makes FCTN position's display marker move right: moving INIT to DN (down) makes it move left; function of RT controlled is changed accordingly. When FCTN is at CHAN, moving INIT to UP or DN makes display number increase or decrease; RT channel is changed accordingly.

5. FCTN (function) switch. Used with INIT switch to change functions of RT and CM.
   A. TEST. Only used to run CM self-tests. Displays show results. Tests will continue until FCTN is moved out of TEST.
   B. RF. Used to set power output of RT. INIT switch is used for adjusting.
   C. RT MODE. Used to set RT mode, including power off. INIT switch is used for adjusting. RT MODE display shows operating mode.
   D. CHAN (Channel). Used to select RT channel (including MAN and CUE) and FH hopset. INIT switch is used for selecting. CHAN displays shows channel selected. 0 on display indicates MAN (manual). C on display indicates CUE.
   E. VAR (variable), Used to select COMSEC variables.
   F. COMSEC. Used to select RT COMSEC mode (plain or cipher text).
   G. CONTROL. Used to change CM operation from stand by (S) to main (M). When two units are used, only one will be on main (M) at any one time. The other will be on stand by (S). The main (M) unit controls the RT. The INIT switch is used to switch unit from S to M. CONTROL display shows operating condition.

6. RADIO switch. Selects RT to be controlled. Positions 1 and 2 are for the RT in positions A and B of mounting adapter having two RT. Position 3 is for the RT in position A of the second mounting adapter (when used).

7. J3 connector. Cabled to J3 of second CM (when used).

INITIAL SET-UP AND SELF-TEST

CM Initial Set-Up and Self-Test. If the CM does not operate correctly, perform the troubleshooting procedures on page 5-13. If you still cannot operate, set RT FCTN to SQ ON, and set the other controls as needed (this bypasses the CM so you may continue to operate).

a. Set mounting adapter CB1 to ON.

b. Set RT FCTN to REM.

C. Set intercom (if used) to ON.

d. Test CM:

(1) Set CM FCTN to TEST.

(2) Adjust DIM and check displays. All displays must light.

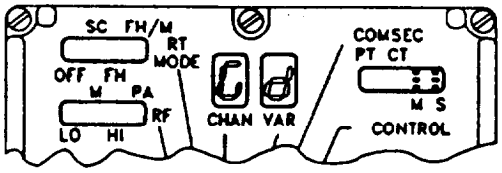

- At the end of the test, CHAN and VAR must show ‘Gd”, and CONTROL must be at M or S (see example shown).
- To stop test, set CM FCTN to a different position.
- If you are using a system that has two CM’s, test each one after initial set-up (steps a thru d).

e. Set CM RADIO switch to the RT it will be controlling.

- CONTROL must be at M; if it is at S, set CM FCTN to CONTROL; then move INIT to DN, and release when CONTROL moves to M.

f. Check displays for initial RT set-up:

- RF must be at LO.
- RT MODE must be at SC.
- CHAN must be at 0.
- COMSEC must be at PT (VAR must be blank).
- If CHAN and VAR show "F7”, move INIT switch to UP; then release; "F7” must change to "Ud” (update). If CHAN and VAR show "Ud”, the RT is setting up (initial set-up may take up to 6 seconds). All displays must show as described in step f after "Ud” goes off.

SETTING AND CHANGING RT FUNCTIONS

Setting and Changing RT Functions. If you have just powered up, do the initial set-up and self-test procedure (page 4-10). Perform the following procedure to set the RT functions.

a. Check the CONTROL display on CM:

- Display must show M; if it is at S, set the control-monitor FCTN to CONTROL, then move INIT to DN, and release when CONTROL moves to M.

b. Make sure that CM RADIO switch is set to the RT it will be controlling.

c. Changing RT function:

(1) Set CM FCTN to desired position.

(2) Move INIT to UP or DN, After function display changes, release INIT.
For bar displays, INIT (when moved to UP) moves marker to the right.
For bar displays, INIT (when moved to DN) moves marker to the left.
For number displays, INIT (when moved to UP) increases number.
For number displays, INIT (when moved to DN) decreases number.

- If a "0" appears on the CHAN display, you are in MAN channel.
- If a blinking "C" appears on the CHAN display (and all other displays go blank), you are being cued. A blinking “C” also appears if cue channel is empty. Likewise, when a channel which is empty is selected, the channel number will blink.
- if "F7” appears on the CHAN and VAR displays, repeat INIT movement several times (if "F7” stays on displays, troubleshoot the CM, page 5-13).

d. Shutting down:

- Turn CM FCTN to MODE, and move INIT to DN until marker lights at OFF.
- Turn off intercom (if used).
- Turn CB1 of mounting adapter to OFF.

CABLING

CM CABLING. Not all vehicular radios use CM's. Cabling is shown for reference. All cables shown are CX-13290/VRC. If you have a single radio mount and power supply adapter, connect CM to power supply adapter connector J3.

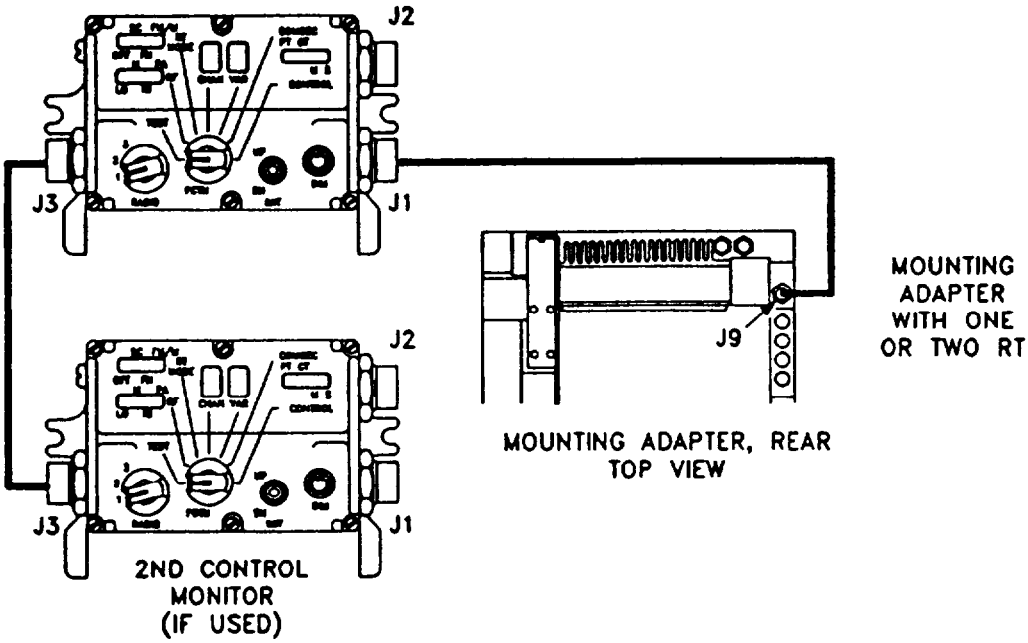

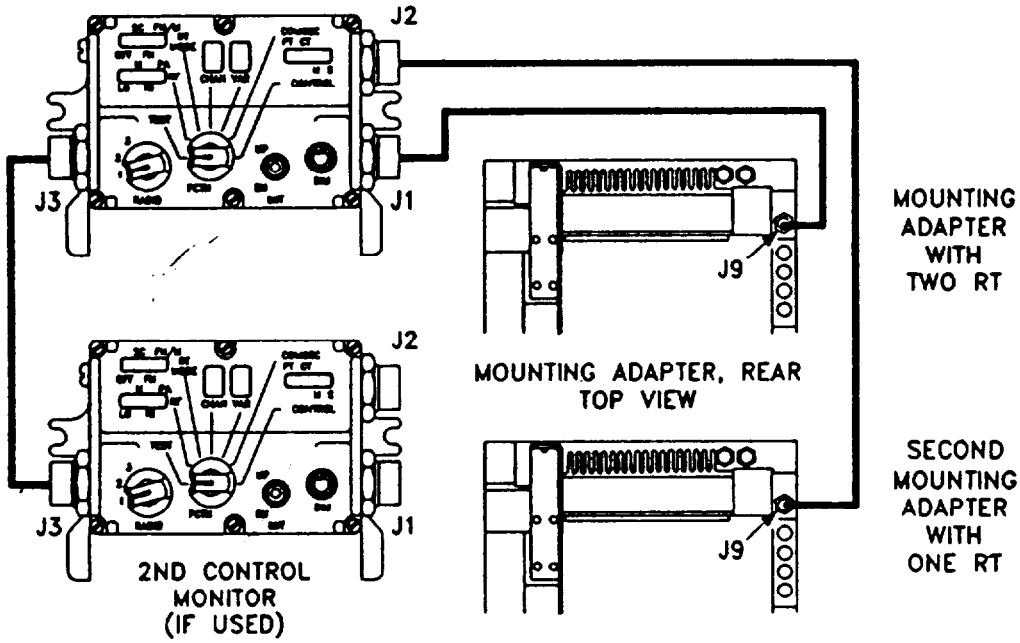

CM Cabling

SECTION III. ECCM FILL DEVICE

ITEM	PAGE
Checking for Fill Data in Fill Device	4-13
Zeroing Fill Device Data	4-13
Loading Fill Device Using Another Fill Device	4-14

CHECKING FOR FILL DATA IN FILL DEVICE

Checking for Fill Data In Fill Device.

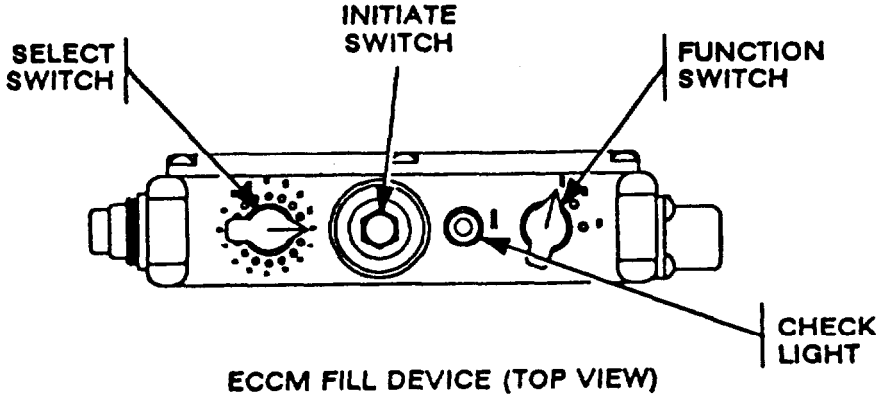

ECCM FILL DEVICE (TOP VIEW)

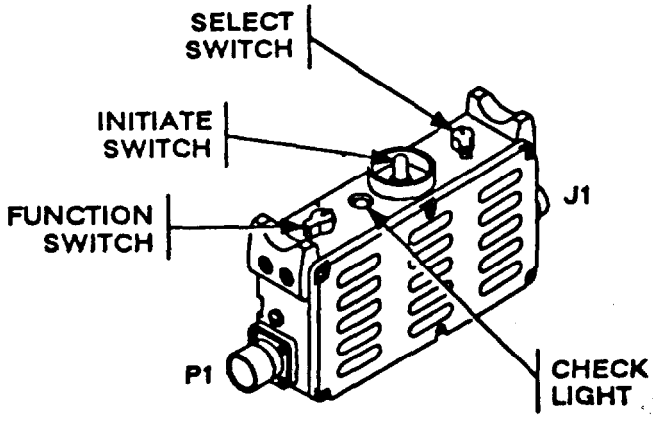

ECCM FILL DEVICE (TOP AND SIDE VIEW)

a. Set function switch to OFF.
b. Set select switch to position to be checked.
c. Press Initiate switch.
   - Check light will blink if data is present in position selected.

ZEROING FILL DEVICE DATA

Zeroing Fill Device Data.

a. Press initiate switch (do not release).
b. Set and hold function switch to 2.
c. Check all select switch positions. CHECK light should not blink.

LOADING FILL DEVICE USING ANOTHER FILL DEVICE

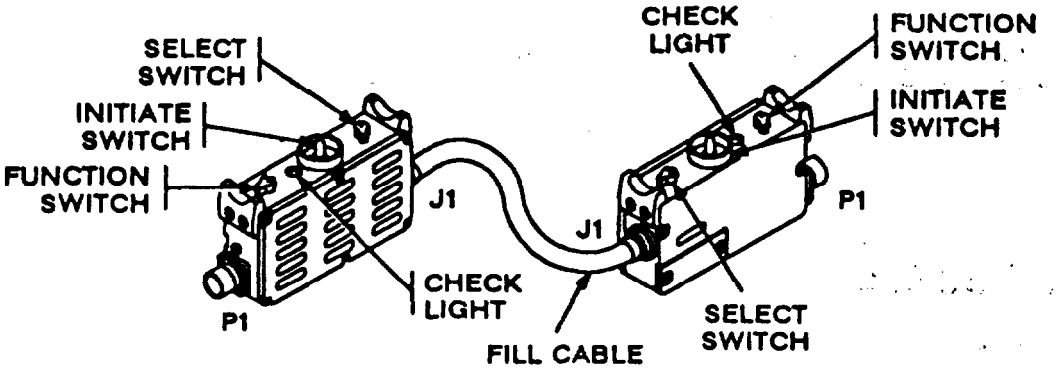

Fill Device Connected to Fill Device (using fill cable)

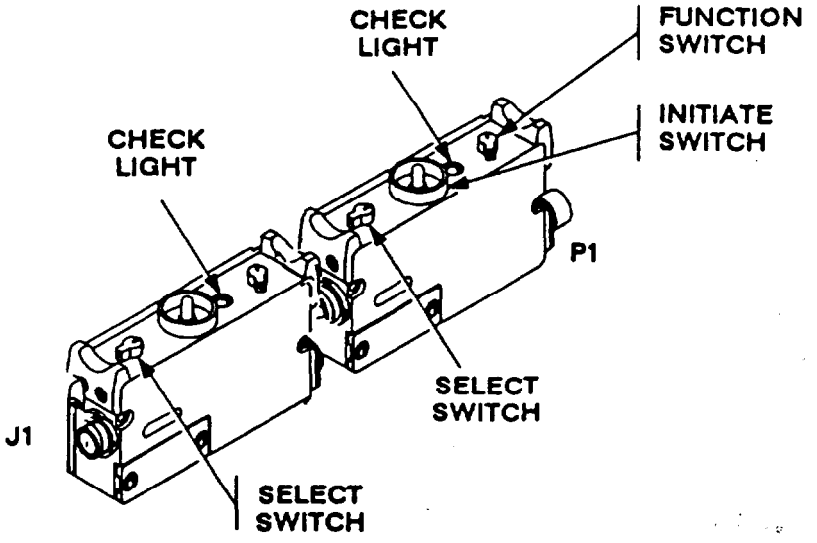

Fill Device Connected to Fill Device

a. Set function switch to OFF.
b. Connect fill devices using fill cable (refer to illustration above).
   - if you don't have a fill cable, connect one fill device directly to the other (P1 to J1).
c. Set both function switches to ON.
d. Set select switch to position of fill data (on fill device having fill data).
   - If all positions are to be transferred, set select switch to A.
e. Press initiate switch of fill device to be loaded and watch CHECK light.
   - CHECK light will blink when data has been accepted.
f. Record data identification number on fill device (that just accepted data) side panel.
g. Repeat steps c thru f for each position to be filled.
h. When all data loading is finished, set both function switches to OFF.
i. Disconnect fill devices (or fill cable).
j. Check fill data (page 4-13).

SECTION IV. OPERATION WITH EXTERNAL EQUIPMENT

ITEM	PAGE
Checking/Setting Data Pate	4-15
Operation With External Equipment	4-16
Cabling Diagrams (GRA-39)	4-16
Intercommunication Set AN/VIC-1 (V) (VIC system)	4-18
Wire Line Adapter	4-20

CHECKING/SETTING DATA RATE

CHECKING/SETTING DATA RATE. Set data rate when using RT for data communications. Otherwise, set data rate to OFF. Data rate is displayed by pressing DATA. To change data rate, press CHG while the data rate is displayed. Each time CHG is pressed, the data rate will advance to the next setting. When all other rates have been displayed, data rate will return to OFF.

CHECKING DATA RATE

a. Set FCTN to SQ ON.

b. Press DATA. Display shows data rate (rate may be 600, 1200, 2400, 4800, 16000, AD1, TF, or OFF).

SETTING DATA RATE

a. Set FCTN to SQ ON.

b. Press DATA. Display shows data rate.

c. Press CHG. Data rate will change with each press.

d. Continue to press CHG until display shows the data rate you wish to use.

- For voice communication, choose OFF.

OPERATION WITH EXTERNAL EQUIPMENT

Be sure your radio is ready to operate. Set its switches and controls. For DATA rate settings, check the list that follows; specific information is given there. If your equipment is not listed, set DATA to OFF or match its rate to that of the data device. Before starting operations, make voice contact with the other station(s).

Be sure your radio is cabled correctly. See the cabling diagrams on pages 2-24 thru 2-27.

The list that follows gives instructions peculiar to some equipment. Be sure to read them; do those that apply to your equipment. As needed, refer to the equipment operator's manual.

REMOTE CONTROL DEVICE (C-2329/GRA-39). Do not set the RT FCTN switch to REM.

- Cabling Diagram. The following diagram shows how to connect the radio to one or two GRA-39 Remote Control Devices.

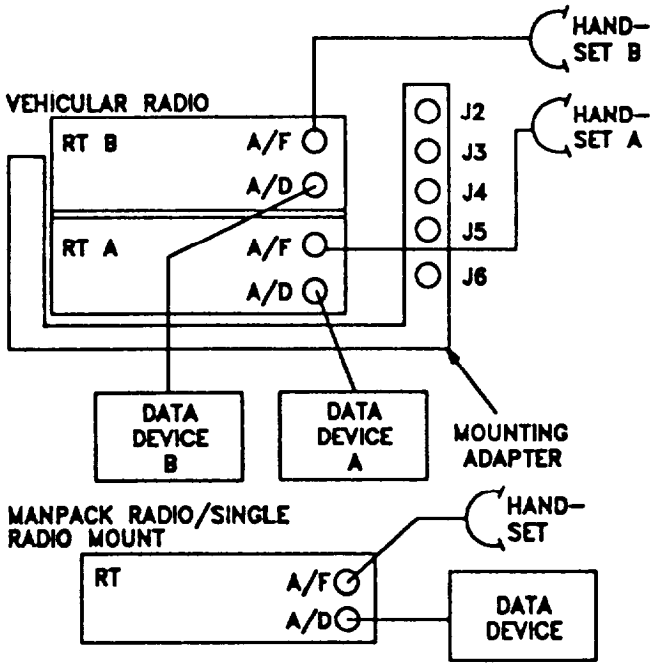

CABLING FOR VOICE/DATA OPERATIONS

OPERATION WITH EXTERNAL EQUIPMENT Continued

TELETYPE (AN/UGC-74). Have teletype's internal switches set as follows:

PARITY - ODD	CLOCK - +
STATE - ICT or KSR	SIGNAL - NRZ
REC MODE - LO DATA	STOP BITS - 2
XMIT MODE - LO DATA	MODE - ASCII
BAUD RATE - 1200* CLOCK - INT	FIGURES - (Does not matter with MODE at ASCII.)

*RT can operate with baud rate at 600, or 1200, 2400, 4800, 16000 bits per second (bps). 1200 is preferred. If internal BAUD RATE switch cannot be set, find out what rate teletype is set to; then set RT DATA rate to match it. If a Y-cable is provided for connection to a manpack radio, the double is connected to the RT AUD/DATA and AUD/FILL connectors. In all cases, use J1 on teletype to cable to RT.

NOTE

Refer to the applicable technical bulletins listed in Appendix A when operating external equipment with RT.

OPERATION WITH EXTERNAL EQUIPMENT Continued

VIC SYSTEM (Intercommunication Set AN/VIC-1 (V)). The VIC system provides control of power to crewmember control boxes and the radios. The amplifiers also amplify and control the audio signals. The main junction box (AM-1780/VRC) has ten cable connectors used to connect to control boxes and an RT or RCU. It has four selector switches, one circuit breaker, one power indicator, two sets of binding posts and an audio amplifier. Four connectors are used to connect control boxes. Connector J504 is always used for the commander's control box. Crewmember controt boxes are connected to J505, J506, or J507. Three RT or RCU can be connected to the main junction box. The main junction box and control boxes can be used with a radio or RCU mounted in either a mounting adapter or power supply adapter. Refer to the following applicable cabling diagrams. For control box C-2298/VRC and main junction box switch settings, refer to page 4-19.

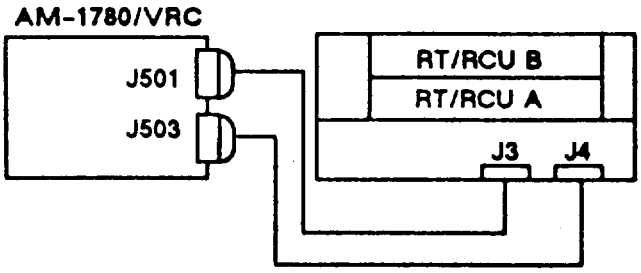

MOUNTING ADAPTER WITH ONE OR TWO RT/RCU

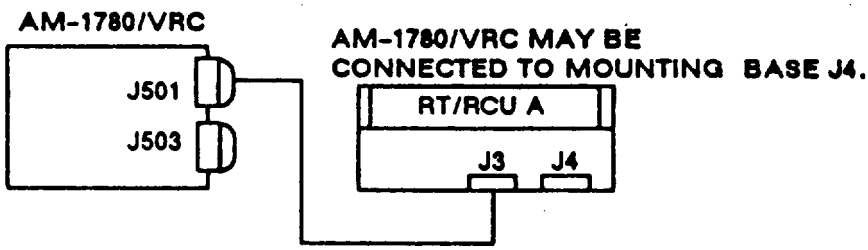

SINGLE RADIO MOUNT WITH ONE RT/RCU

- Main Junction Box (Amplifier, Audio Frequency AM-1780/VRC). The main junction box controls power to the radios and the control boxes. Refer to the following list for main junctibn box switch settings:

MAIN PWR:	OFF	Removes all power from the system.
	INIT ONLY	Allows communication between crewmembers.
	NORM	Supplies power to the mounting adapter or power supply adapter (power to radios).
CKT BKR:	OFF	Removes power to the control boxes.
	ON	Supplies power to the control boxes.
INT ACCENT:	ON	Reduces receive RT audio (intercom audio remains the same).
INSTALLATION:	RETRANS	Disconnects PTT capability between radios and control boxes.
	OTHER	Used when main junction box is connected to radios.
	INT ONLY	Used when main junction box is not connected to radios.
RAD TRANS:	CRD + CREW	Allows all crewmembers to use PlT for radios.
	CDR ONLY	Allows commander (only) to use PTT for radios.
	LISTENING	Does not allow PTT for radios.
	SILENCE	

- Control Box (Control, Intercommunication Set C-2298/VRC). The control box is used to allow communication between commander and crewmembers. If you have a different control box (C-2296, C-2297, or C-10456) in the VIC system that you are using, refer to the appropriate operator's manuals for switch settings. Refer to the following list for control box switch settings:

VIC CONTROL BOX FUNCTIONS BY SWITCH POSITION:

FUNCTION	POSITIONS'	CDRS	CREW
RADIO "A" (TALK + LISTEN)	ALL, A	YES	YES
RADIO "B" (LISTEN)	ALL, C	YES	YES
INTERCOM (TALK + LISTEN)	ALL	YES	YES
	INT ONLY	YES	YES
	A	YES	YES
	C	YES	NO

* Position B is not used with SINCGARS.

WIRE LINE ADAPTER, HYX-57/TSEC

INTRODUCTION. In addition to the RCU, Wire Line Adapters (HYX-57/TSEC) may also be used to remote SINCGARS radios. This feature is particularly valuable to those units which have not yet received the RCU.

CABLING, The set up for remoting a SINCGARS radio is as shown here:

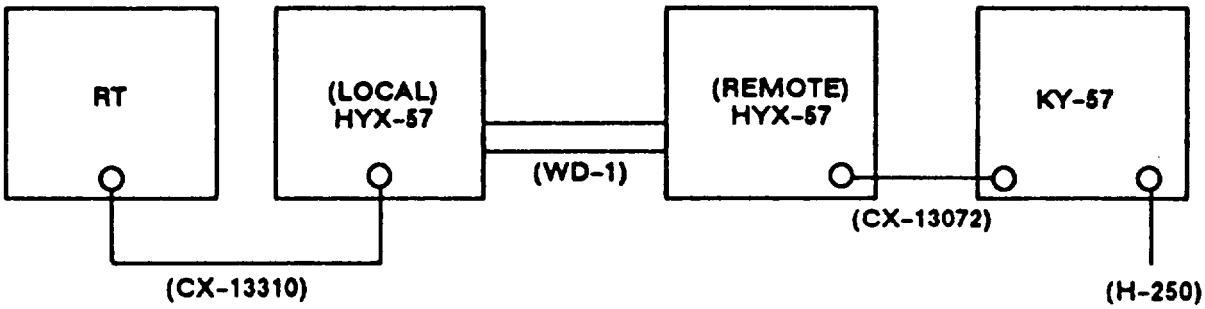

- Connect a Wire Line Adapter Cable (CX-13310) from the RXMT connector on the RT to the Radio/KY connector on the Wire Line Adapter (HYX-57).
- With field wire, WD-1, connect the two HYX-57s using binding posts marked "T/R".
- Using an HYX-57 interconnect cable (CX-13072), furnished with the HYX-57, connect from the “Radio/KY’ connector on the HYX-57 to the "‘Radio” connector on the KY-57.
- The handset, H-250, connects to the audio connector of the KY-57.

MODE AND SWITCH SETTINGS.

MODE	SWITCH SETTINGS			
	RT	HYX-57	KY-57	CX-13310
SC, PT	SC, PT, RXMT	PWR HI/LO 2-WIRE, 16K	PT	“SC-PT”
FH, PT	FH, PT, RXMT	PWR HI/LO 2-WIRE, 16K	PT	“FH-PT”
SC, CT	SC, PT, RXMT	PWR HI/LO 2-WIRE, 16K	CT	"CT”
FH, CT	FH, PT, RXMT	PWR HI/LO 2-WIRE, 16K	CT	"CT”

NOTE

- Interconnect cable, CX-13310, contains a small control box having four switch settings: "OW" (‘order wire’), "SC-PT”, "FH-PT" and "CT”.
- For using the Wire Line Adapter to remote the SINCGARS radio, the remoted RT must be set to, and remain in, the RXMT position.

SECTION V. ADDITIONAL OPERATING PROCEDURES

ITEM	PAGE
Retransmit	4-21
SC to SC	4-21
FH to FH	4-22
SC to FH	4-22
ERF Relay	4-23
Operational Notes	4-24
Scanning	4-25
Battery Tray	4-26
Mounting Battery Box on Battery Tray	4-26
Checking Battery Life Condition	4-26

RETRANSMIT

If you need to communicate to a station beyond your reach, or if a barrier (such as a mountain) is blocking communication, you can set up a retransmit station. This will enable you to send messages to a retransmit station which will then relay your message to the desired station. There are four methods for retransmit operation. The one you use will depend on which mode (SC or FH) you are using, or if you wish to relay ERF signals. Refer to the following illustrations as needed while performing a procedure.

SC to SC.

a. Set up RT C and D for normal SC operation.
b. Both RXMT radios must be set to PT for RXMT operations.
c. Make sure that RT C is operating on a frequency that is separated by a minimum of 10 MHz from the frequency used by RT D.
d. Connect retransmit cable (refer to illustration below).
e. Have RT C contact RT A. Confirm communication.
f. Have RT D contact RT B. Confirm communication.
g. Set RT FCTN to RXMT (RT C and D only). The retransmit station is ready.
h. Have RT A contact RT B and confirm communication.

(Note: With RXMT RTs in PT ,A may talk with B in CT. RXMT operators will not hear CT transmissions. RT A or B must go to PT to contact the RXMT station.)

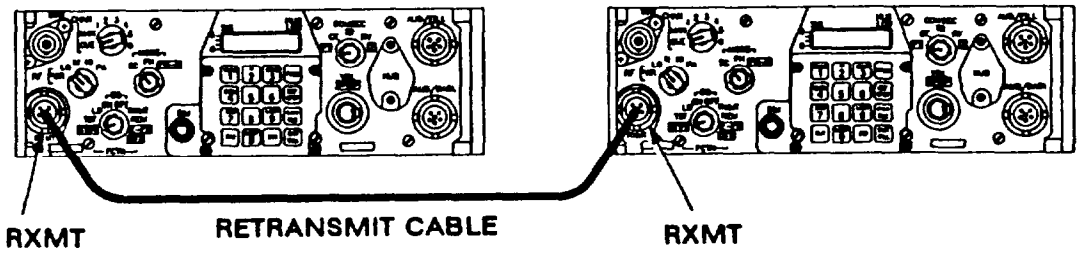

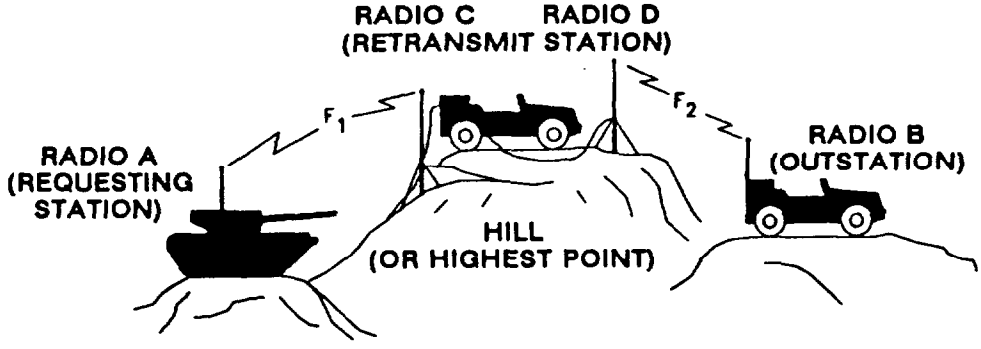

FH to FH. If possible, RT C and D should have all required FH data before being taken to their site. RT A and C must have the same FH data. RT B and D must have the same FH data. Hopset F1 (used by RT A and C) must be different from hopset F_2 (used by RT B and D). If the outstation does not have the retransmit FH data, a retransmit RT will have to ERF the new FH data to the outstation.

a. Set up RT C and D for FH operation. Make sure FCTN is at SQ ON for both RT.

b. Set RT C MODE to FH and COMSEC to CT or PT. Contact RT A with RT C.

c. Set RT D MODE to FH and COMSEC to CT or PT. Contact RT B with RT D.

d. If RT A is the NCS, set RT D MODE to FH-M. If RT B is the NCS, set RT C MODE to FH-M.

e. Connect the retransmit cable (see illustration, page 4-21); then set RT C and D FCTN switches to RXMT. The retransmit station is now ready. RT A can contact RT B.

(Note: RXMT radios may be set to either CT or PT, but RXMT operators can hear transmissions only when RTs are set to CT.)

SC to FH retransmit operation (mixed mode). RT C and D should have all required FH data before being taken to their site if possible.

a. Set up RT C and D. Set up one for operation on SC net's frequency; set up the other for FH operation on FH net's hopset. Set retransmit RT COMSEC switch to PT.

b. Contact SC net outstations using SC retransmit RT. Confirm communications.

c. Contact FH net NCS using FH retransmit RT. Confirm communications.

d. Connect retransmit cable (see illustration, page 4-21).

e. Set RT C and D FCTN switches to RXMT. Both RXMT radios must be set to PT for RXMT operations. The retransmit station is now ready.

f. Contact RT B with RT A. Confirm communication.

RETRANSMIT Continued

ERF relay operation. An ERF signal will not automatically pass through a retransmit RT to another outstation. If possible, RT C and D should have all required FH data before being taken to their site. RT A and C must have the same FH data. RT B and D will have the same FH data. In the following example, RT A is the NCS, and RT D has the MODE switch set to FH-M

NOTE

Before starting this procedure, make sure communication is possible between links. RT A (NCS) MUST set COMSEC switch to PT

a. RT A tells RT C to break the retransmit link (set FCTN to LD) and to stand by for ERF.

b. RT C sets FCTN to LD.

c. RT A sends ERF to RT C; then RT C stores ERF, and changes MODE to FH-M.

d. RT C has RT D stand by for FH update.

e. RT D sets FCTN to LD and MODE to FH.

f. RT C sends FH update data to RT D; then RT D stores data (RT D must have same FH data as RT C to receive update data).

g. RT C sets MODE to FH and FCTN to RXMT.

h. RT D sets MODE to FH-M ,and has RT B stand by for FH update.

i. RT B sets FCTN to LD and MODE to FH.

J. RT D sends FH update data to RT B; then RT B stores data.

k. RT D sets MODE to FH, and FCTN to RXMT.

l. Retransmit operation is now possible.

m. If required, RT A communicates with RT B on new hopset.

OPERATIONAL NOTES

PREFERRED ANTENNA CONFIGURATION

The recommended antenna configuration for a retransmit station is two OE-254 antennas. OE-254 antennas should be fully extended and separated to their maximum distances (based on site constraints). Under no circumstances should the OE-254 antennas be positioned less than 75 feet apart. (However, if more than one retransmit station Is located within a confined area, a special antenna configuration may be required.)

ALTERNATE ANTENNA CONFIGURATION

Never use two vehicular antennas for FH retransmit. However, two vehicular antennas may be used for SC retransmit.

A vehicular antenna may be used with an OE-254 antenna (fully extended) provided the OE-254 antenna is used for the retransmit link which is the longest,

When using a vehicular antenna with an OE-254 antenna, it is important to note that the preferred distance between antennas is 50 feet. The minimum antenna separation (base to base) is 15 feet.

SITE SELECTION

The retransmit station must be located on top of a hill (or highest point).

Both outstations must be within the retransmit station's line-of-sight (LOS). LOS is defined as a clear path (no barriers such as mountains, tall buildings, etc.) between the retransmit station and the outstations. Refer to the Illustration on page 4-21.

OPERATIONAL REMINDERS

Refer to the SOI for authorized hopset(s).

Make sure RF switch is set to the lowest possible setting for good communication.

F1 represents the frequency (hopset) between radios A and C. F2 represents the frequency (hopset) between radios B and D.

Radio link A and C should have a different hopset than radio link B and D during FH retransmit. However, if only one hopset is available, it may be used for both links provided the net ID's are different, antenna configuration notes are followed, and each radio sets RF switch to lowest possible setting for good communication.

A COMSEC key is not needed to retransmit secure signals, but it Is needed for monitoring.

Radios at the retransmit site (radios C and D) must have COMSEC switch set to PT once retransmit operation has begun. However, communication is secure (based on the status of the outstation).

Cue and ERF signals will not pass through a retransmit station.

SCANNING

The RT can scan up to eight preset SC frequencies (all positions of CHAN). When a signal is found, the RT will “lock in” on the channel. The keyboard will then show the channel number that has been ‘locked-in”. You can listen and transmit on that channel. When the channel has been inactive for 2.5 seconds, scanning will continue.

Scanning. Use the following procedure to set up the RT to begin scanning.
a. Set FCTN to SQ ON, SQ OFF, or RXMT. b. Set MODE to FH. c. Set CHAN to CUE. d. Set COMSEC to PT. e. Set other controls as needed. f. Press ST0 (display will show “SCAN-“). g. Enter a number on the keyboard, 0 - 7 (display will show the number entered; scanning has now begun). • The number entered will be scanned more often than the other channels. This channel is a priority channel. If you do not want any channel to have priority, enter the number 8. • If you wish to transmit on the priority channel (channel number you entered on keyboard), key the transmitter. When you key down, the display will show “CH” followed by the priority channel number.

To Transmit on a “Locked-in” Channel: Press handset push-to-talk and talk (you must do this within 2.5 seconds after the traffic has stopped or scanning will begin again).

To Select a Channel for Transmission: Enter number for channel on keyboard (press PTT switch within 2.5 seconds after display shows channel number selected).

To Cancel a Channel from Scan Sequence: Enter channel number on keyboard that you wish to delete (the priority channel cannot be deleted); then press CLR. Scanning will begin again and the cancelled channel number will not "lock in”.

To Restore a Canceiled Channel: Enter number of channel-that was cancelled on keyboard (display will show "CH" and the channel number entered). The channel is now back in the scanning sequence.

To Scan While “Locked-In” on a Channel: Press STO.

To Check Frequency of “Locked-In” Channel: Press FREQ while channel number is on display (display will change to show frequency of channel).

To Stop Scanning: Set CHAN (or MODE) to different position.

BATTERY TRAY

Lithium batteries are installed in a battery tray and used as backup power for vehicular radios that are installed in a single radio mount.

MOUNTING BATTERY BOX ON BATTERY TRAY.

a. Aline battery box and battery tray connectors; then mate securely,

b. Position battery In battery box; then secure battery box cover using latches.

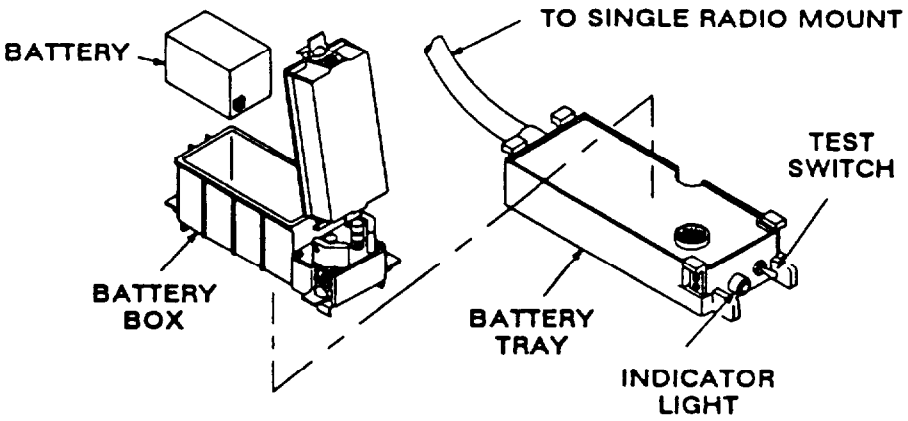

installation of Battery and Battery Box to Battery Tray

CHECKING BATTERY LIFE CONDITION.

With the battery and battery box mounted in the battery tray, press the test'switch. If the indicator light is lit, the battery is good. If the indicator light is not lit, replace the battery.

SECTION VI. OPERATION UNDER UNUSUAL CONDITIONS

ITEM	PAGE
Emergency Procedures	4-27
Unusual Weather	4-30
Fording	4-30

EMERGENCY PROCEDURES

CALLING FOR HELP. If you know nothing about the radio, do the following to call for help.

a. Set RT FCTN switch to SQ ON, RT RF switch to HI or PA. DO NOT CHANGE ANY OTHER SWITCH SETTING.

b. Press the push to talk button on handset or intercom.

c. Speak into the handset or Intercom.

d. Release the push to talk button.

e. Wait for response (about 15 seconds).

f. Repeat as needed.

g. If no response is heard, change CHAN to CUE: then repeat steps b thru e.

EMERGENCY PROCEDURES Continued

CALLING FOR HELP. If you are familiar with the radio, and need to call for help, perform the following steps:

Frequency hopping (FH) nets	Single channel (SC) nets
a. Set FCTN to SQ ON.	a. Set FCTN to SQ OFF.
b. Set MODE to FH, COMSEC to PT.	b. Set MODE to SC, COMSEC to PT.
c. Set CHAN to CUE (load CUE frequency if needed, page 2-33).	c. Set RF to HI.
d. Set RF to HI.	d. Turn VOL fully right (clockwise).
e. Turn VOL fully right (clockwise).	e. Set data rate to OFF.
f. Set data rate to OFF.	f. Set CHAN where needed: then press FREQ button and release. ● Display must show frequency. If it shows “00000”, find SOI; then find net’s CUE or SC frequency and load it (page 2-33).
g. Press handset push-to-talk and call NCS.	g. Press handset push-to-talk and call NCS.
h. Wait 15 seconds for reply.	h. Wait 15 seconds for reply.
i. Repeat steps g and h as needed.	i. Repeat steps g and h as needed.

MANPACK BATTERY NEAR END OF ITS LIFE. Transmit as little as possible. Use the lowest RF switch setting which still Jets you communicate. When possible, set RT FCTN to STBY .

VEHICLE SYSTEM BATTERY DEAD. If you have a dismount radio, remove an RT from its mounting adapter (or power supply adapter): then assemble a manpack radio.

HOLD UP BATTERY (HUB) DEAD. If presets are cleared when the power is cut off, the HUB might be dead. If this happens, re-load the presets: then keep the RT FCTN switch set to an operating position (do not set FCTN switch to STBY).Leave CB1 on mounting adapter or power supply adapter (vehicular radios) set to ON (do not set CB1 to OFF).

VEHICULAR ANTENNA BROKEN. Try communicating on a higher SC frequency. If you have a dismount radio, remove the antenna cable from the RT ANT connector; then connect the manpack antenna to the ANT connector.

CONTROL-MONITOR FAULTY. Maintain radio operation by local control. Set the RT FCTN switch to SQ ON. Set all other controls as needed.

EXPOSURE TO NUCLEAR RADIATION. If you cannot contact another station after a nuclear event, do the following steps:

a. Reset RT: Set FCTN to STBY ; then to SQ ON.
b. Test RT. Set RT FCTN to TST. Check displays for proper indications (page 5-4).
c. Check FH sync time. Press • • • /TIME button three times and note if the seconds are running. If they are, go on to step d. If they aren't, go on with steps c(1) and c(2).

(1)
- Manpack: Check battery life condition. Remove battery from back of RT and reinstall it. Reset battery life condition.
- Vehicular: Set mounting adapter (or power supply adapter) CB1 to OFF; then back to ON.

(2) FH operators: Set FH sync time. Use the net's time standard. If a time standard is not available, contact NCS; use late entry or cue procedures.

d. Communicate. Set RT FCTN to normal operating position; then contact the desired station.

FILL CABLE DAMAGED. Substitute vehicular cable between RT AUD/DATA connector and mounting adapter.

UNUSUAL WEATHER

OPERATION IN BAD WEATHER. If you are operating your radio in unusual weather, do the PMCS more often. Keep your radio controls as clean as you can (especially the keyboard and display). Keep your radio shaded from the sun as much as possible when operating in a hot climate.

Your radio should operate under any of the following conditions:

- Moist heat (tropics)
- Dry heat (deserts)
- Ocean spray
- Salty air
- Sand or dust storms
- Mud

OPERATION IN LOW TEMPERATURES. Keep ice off of your equipment. Cables may become brittle if they are exposed to cold weather. Do not bend them at sharp angles. Make sure the vehicular charging system is strong enough for you to communicate. Batteries lose their power when they get cold. If you have a dismount radio, check the battery life condition more often. Log battery life condition each time you assemble or disassemble manpack.

NOTE

If you have SC or FH presets in the RT, do not set FCTN STBY if the temperature drops below +20° F. You may cause the presets to be cleared by shutting off RT power.

FORDING

Your radio has been tested and it is water tight. You do not have to make special preparations for water crossing. After fording, remove any mud or other foreign matter as soon as you can.

CHAPTER 5
MAINTENANCE INSTRUCTIONS

		PAGE
SECTION I.	PMCS	5-1
I.	Troubleshooting Procedures	5-9
II.	Operator Maintenance	5-17

SCOPE

Chapter 5 contains maintenance instructions. Maintenance instructions include preventive maintenance checks and services and troubleshooting information for the radio and other communications equipment as well as routine operator checks and cleaning, Operational troubleshooting for the operator and the NCS can be found in their respective chapters.

SECTION I. PREVENTIVE MAINTENANCE CHECKS AND SERVICES (PMCS)

ITEM	PAGE
Battery Physical Condition	5-3
Battery Electrical Condition	5-3
HUB Electrical Condition	5-3
Receiver-Transmitter Self-Test	5-4
Transmitter	5-5
Mounting Adapter and Mounting Base (or power supply adapter and single radio mount)	5-5
Remote Operation	5-6
Control-Monitor Self-Test	5-6
Control-Monitor RT Function Control	5-7
Cables	5-8

PMCS

PMCS TABLE, The PMCS table lists the checks required to keep your radio in good shape.

- The “when” column tells you when to do a check or service.
- The “procedure” column tells you how to do the check or service. Follow the instructions carefully.
- The “equipment is not ready/available if” column tells when and why your radio cannot be used. The terms ‘ready/available” and "mission capable” refer to the same status: Equipment is on hand and is able to perform its combat missions. (See DA Pam 738-750.)
- Read the cautions and warnings in the front of this manual before doing PMCS.
- Make sure your radio is assembled and ready for your mission.
- If your radio fails to operate after performing a PMCS, do the troubleshooting procedures in section II of this chapter. Report the problem and the actions you’ve taken on the proper form(s). See DA Pam 738-750. If performing PMCS and troubleshooting procedures do not solve the problem, have unit maintenance check your radio.

PMCS Continued

SPECIAL INSTRUCTIONS. Some checks and services are routine and should be done whenever you see the need. These routine checks are not covered in the PMCS table. Routine checks include cleaning, checking for cable damage, and making sure hardware is secure. For detailed information on routine checks, see Section III.

PMCS TABLE. The PMCS table lists the checks and services required to keep your radio in good operating condition.

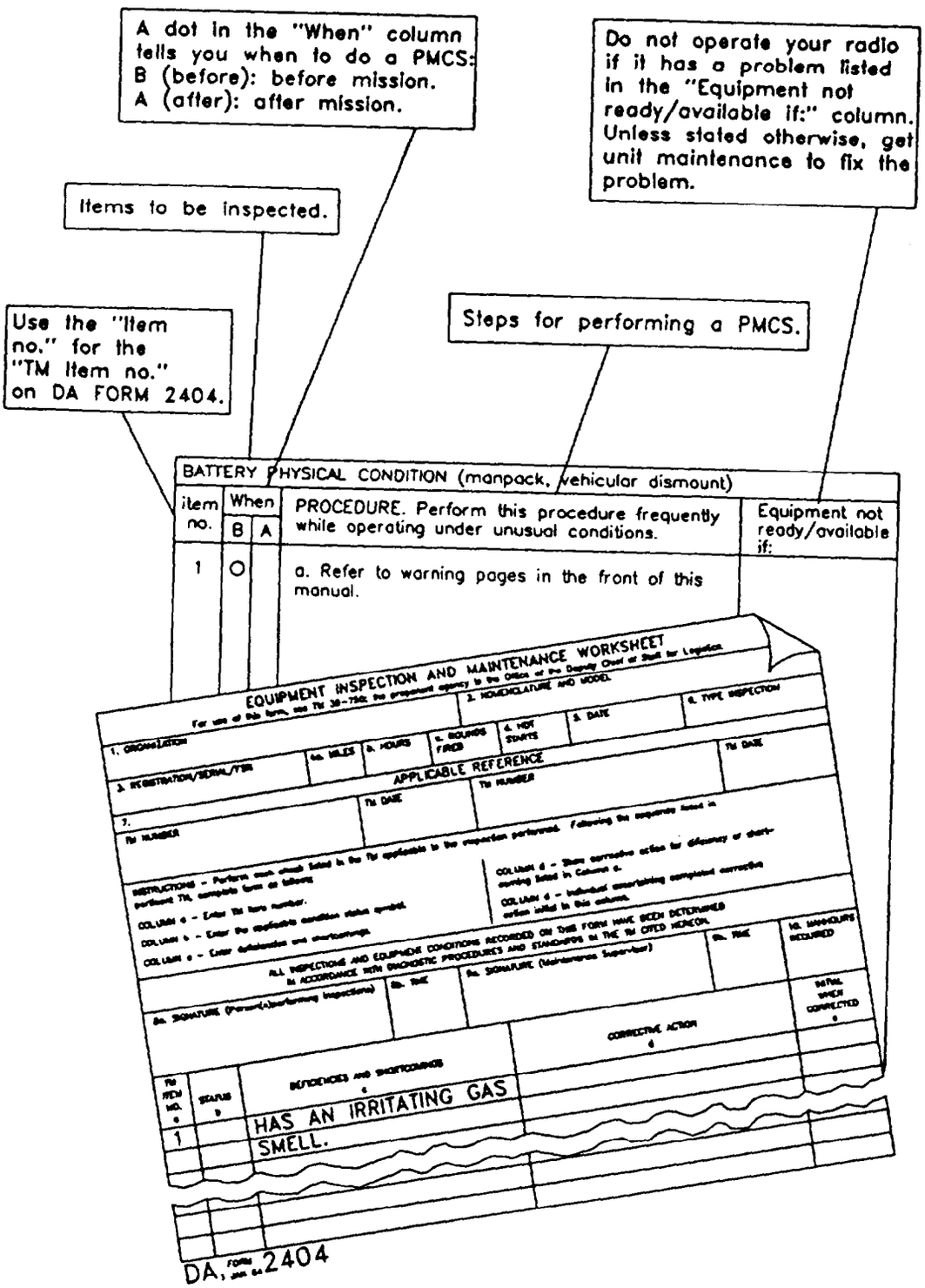

BATTERY PHYSICAL CONDITION (manpack, vehicular dismount)				
Item no.	When		PROCEDURE	Equipment not ready/available if: (See Maint)
	B	A		
1	●		a. Refer to warning pages in the front of this manual. b. Visually inspect battery often. c. Replace battery if you smell an irritating gas, or hear a hissing or burping sound. d. Touch battery compartment. if it feels hot, allow it to cool for at least 1 hour; then replace battery.	Smell irritating gas: hear hissing or burping.

BATTERY ELECTRICAL CONDITION (manpack, vehicular dismount)				
Item no.	When		PROCEDURE	Equipment not ready/available if: (See Maint)
	B	A		
2	●		a. Set the battery life condition if you have a used battery, or have brought the RT function out of OFF . (See Chap 2, Checking and Setting Life Condition of Primary Battery.) b. Set FCTN to SQ ON. c. Press BATT and read the displayed battery life used. d. If display showed 11 or higher in step c; replace battery. (For combat and critical mission operations only.) e. Check and log battery life condition if you are going to set FCTN to OFF after completion of PMCS.	Display shows 11 or higher.

HUB ELECTRICAL CONDITION (manpack, vehicular dismount)				
Item no.	When		PROCEDURE	Equipment not ready/available if: (See Maint)
	B	A		
3	●		a. Press FREQ. b. Watch HUB/LOW display. If diamond-shaped light flashes, HUB is weak. If light is steady, HUB is extremely weak or missing. c. Replace HUB if display Is as described in step b. (See Chap 2, Removing and Changing Hold Up Battery.)	Diamond-shaped light flashes or is steady.

PMCS Continued

3

RECEIVER-TRANSMITTER SELF-TEST				
Item no.	When B	When A	PROCEDURE	Equipment not ready/available if: (See Maint)
4	●	●	a. Vehicular: Turn CB1 of mounting adapter to ON. b. Vehicular: Turn lamp lens full left (counterclockwise). c. Set FCTN TO SQ ON, CHAN to MAN, DATA to OFF. d. Set COMSEC to CT. If alarm is heard, refer to page 2-38 and 2-39. e. Set VOL to midrange. f. If KEK is to be used, load it. g. Set FCTN to TST. h. Watch as displays cycle in the following sequence: ● ECCM (E) and COMSEC module (C) check: if either module is not in RT, dash is shown in place of letter. Short bursts of rushing noise are heard. If E is seen, a beep is heard after rushing noise. ● Signal strength display check: lights at all positions from LO to HI. 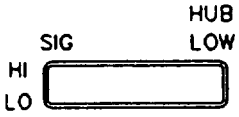 ● Display checks. All dots light as shown. ● Self-test should result in "GOOD ". If FAIL 5, merely change from PT to CT and test will show "GOOD". If any other fail message results, do the following in order: 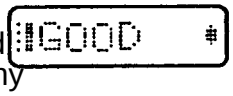 (1) Rerun self-test. (2) If fail message continues, set FCTN to STBY and run self-test again. (3) If fail message still continues, disconnect all cables from RT panel, go to STBY and rerun self-test. (4) if display shows 'GOOD", perform PMCS on cables, reconnect cables, and repeat self-test. (5) If fail message now appears, contact unit maintenance. NOTE If test is done with COMSEC set to PT,, display shows " FAIL 5".	Mounting adapter Dower light is not on, or continues to blink. Display does not light. Display is incorrect; rushing noise not heard: beep not heard (if applicable). Any position does not light. Any part of display is not lit GOOD is not shown.

TRANSMITTER				
Item no.	When B	When A	PROCEDURE	Equipment not ready/available if: (See Maint)
5	•		a. Set COMSEC switch to PT.	
			b. Set RF PWR switch to LO.	
			c. Set MODE switch to SC.	
			d. Set FCTN switch to Z-FH.	Good is not shown.
			e. Set FCTN switch to SQ ON, and CHAN to MAN.	30000 is not shown.
			f. Watch Sig display. Press handset push-to talk. Sig display must be at LO.	Sig display does not light at LO.

MOUNTING ADAPTER AND MOUNTING BASE, OR POWER SUPPLY ADAPTER AND SINGLE RADIO MOUNT (vehicular and vehicular dismount radios)				
item no.	When B	When A	PROCEDURE	Equipment not ready/available if: (See Maint)
6	•		a. Make sure cables are connected correctly. (See Chap 2, Vehicular Radio Assembly.)	
			b. Set MODE to SC.	
			c. Make sure audio device (handset, headset, loudspeaker, intercom) is correctly connected to mounting adapter.	
			d. Set FCTN to SQ OFF.	
			e. Note noise level in audio device.	Noise is not heard.
			f. Set FCTN to SQ ON.	
			g. Note noise level in audio device. Level must be lower than noted in step e.	Noise level does not decrease.

PMCS Continued

REMOTE OPERATION (used for operation with a remote control device)				
Item no.	When B	When A	PROCEDURE	Equipment not ready/available if: (See Maint)
7	●		a. Set FCTN to REM. b. Press and hold CALL. c. Press handset push-to-talk and read display. It must show "CALL" (it may take up to 12 seconds before display shows "CALL"). d. Release CALL and handset.	Display does not show " CALL".

CONTROL-MONITOR SELF-TEST				
Item no.	When B	When A	PROCEDURE. Perform this procedure for each CM in the vehicle.	Equipment not ready/available if: (See Maint)
8	●		a. Turn CB1 of mounting adapter to ON.	Mounting adapter power light is not on.
			b. Set RT FCTN to REM.	
			c. Set CM FCTN to TEST.	
			d. Watch as displays cycle in the following sequence:	
			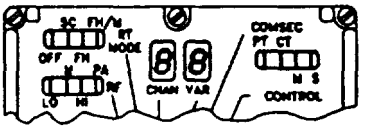 ● All display segments must be fit.	A portion of any display is not lit.
			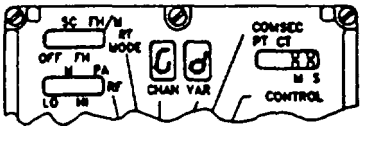 ● CHAN and VAR must show "d" (good) ● CONTROL must show M or S. ● All other displays must be blank.	CHAN and VAR do not show "Gd". CONTROL does not show M or S. All other displays are not blank.

CONTROL-MONITOR RT FUNCTION CONTROL				
Item no.	When B	When A	PROCEDURE. Perform this procedure for each control-monitor in the vehicle.	Equipment not ready/available if: (See Maint)
9	•		a. Set CM FCTN to any position except TEST.	
			b. Make sure CONTROL display shows M. If It does not show M, set FCTN to CONTROL, move INIT to DN; then release INIT when display shows M.	
			c. Set RADIO switch to any position that is not controlling an RT.	
			d. Move INIT to UP and hold.	
			e. Watch CHAN and VAR displays. Displays must show “Er” (error). 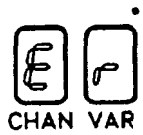	CHAN and VAR do not show “Er”.
			f. Release INIT.	
			g. Set RADIO switch to position of RT to be controlled.	
			h. Wait 15 seconds.	
			i. If CHAN and VAR show "F7”, move INIT to UP: then release. “F7” must disappear.	"F7” remains displayed on CHAN and VAR.
			j. Check displays. They must appear as shown when RT initially sets up. 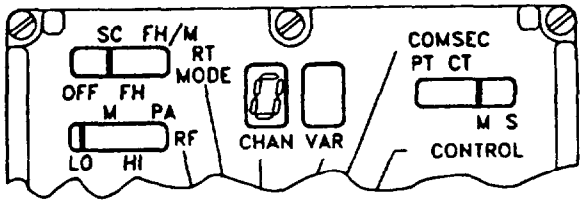	Displays are not as shown.
			k. Change RT RF setting. Change RT MODE, COMSEC setting. Change RT CHAN setting. Select function of CM using FCTN. Move INIT to UP or DN.	RT conditions do not change,

PMCS Continued

CABLES				
Item no.	When B	When A	PROCEDURE	Equipment not ready/available if: (See Maint)
10	●		a. Inspect cables with BNC connectors. Insure connector pin is not bent, pushed in or broken: ground contacts are not bent or broken; connector head is not bent.	Connector pin is pushed in or broken; ground contacts are bent or broken; connector head is bent.
			b. Insure complete connector head does not turn on cable.	Connector head turns on cable.
			c. Inspect cables with 6 pin connectors. Insure that no dirt is inside of connector, pins are clean, corrosion-free and not bent. Verify that spacers have been installed.	Dirty, bent or corroded pins.
			d. Insure 0 ring is present and serviceable.	O ring is missing or not serviceable.
			e. Insure that connector head does not turn on cable.	Connector head turns on cable.

SECTION II. TROUBLESHOOTING PROCEDURES

ITEM	PAGE
Radio	5-11
Power Source	5-11
Self-test	5-11
Sig display during transmit	5-12
Sidetone	5-12
Handset	5-13
Communication..	5-13
Displays	5-14
Control-Monitor	5-14
initial setup and self-test	5-14
RT input/output circuit	5-15
Functioning	5-15
Displays	5-16
RCU self-test and functioning	5-16

SPECIAL INSTRUCTIONS. If you need to turn in your radio to a higher level of maintenance, set RT FCTN to OFF. If you have a manpack or dismount radio, check the battery life condition; then log the number on battery before turning radio in for maintenance, Replace HUB if it is weak or missing. If you have an ECCM fill device, check the date of its battery. If the date is six months old or older, contact unit maintenance.

NOTE

Make sure to do the PMCS as it is scheduled in the PMCS tables. (See Chap 5, PMCS.) This will help eliminate radio failure during a mission.

TROUBLESHOOTING TABLE. The troubleshooting table allows you to check out common malfunctions of your equipment. The table lists the common malfunctions which you may find during the operation or maintenance of the radio, or its components. You should perform the tests/inspections and corrective actions in the order listed.

This manual cannot list all malfunctions that may occur, or all the tests, inspections and corrective actions. If a malfunction is not listed, or is not corrected by listed corrective actions, notify your supervisor.

TROUBLESHOOTING PROCEDURES

RADIO. Power source	
ITEM	PROCEDURE
manpack radio	a. Set FCTN to operating position. b. Press BATT. Display must show 11 or less. ● If display shows 11 or more, replace battery. (Applies to combat and critical missions only: otherwise battery is used until it is exhausted.)
vehicular radio	c. Set CB1 to ON. d. Set FCTN to operating position. e. Turn power light lens of mounting adapter full left (counterclockwise), and make sure it is lit. ● If power light does not light, get unit maintenance to check system.

RADIO. Self-test	
ITEM	PROCEDURE
manpack, vehicular radio	a. Set COMSEC to CT. if alarm is heard, see Chap 2, Loading COMSEC Keys. b. Set FCTN to TST. c. Watch as displays cycle in the following sequence: IE C ♦ I■■■■■ ♦ IGOOD ♦ SIGNAL STRENGTH CYCLES FROM LO TO HI l If any display is not as shown, or if a low level rushing noise is not heard: (1) Rerun self-test. (2) Set FCTN to STBY and rerun self-test. (3) Disconnect all cables from RT, go to STBY, and rerun self-test. (4) If result is “GOOD”, perform PMCS on cables, reconnect them, rerun self-test. (5) If fail message now appears, contact unit maintenance.

TROUBLESHOOTING PROCEDURES Continued

RADIO. Sig display during transmit	
ITEM	PROCEDURE
manpack, vehicular radio	a. Set FCTN to SQ ON. b. Set MODE to SC. c. Press handset push-to-talk and watch SIG marker as you set RF switch to LO, M, Hi, and PA. 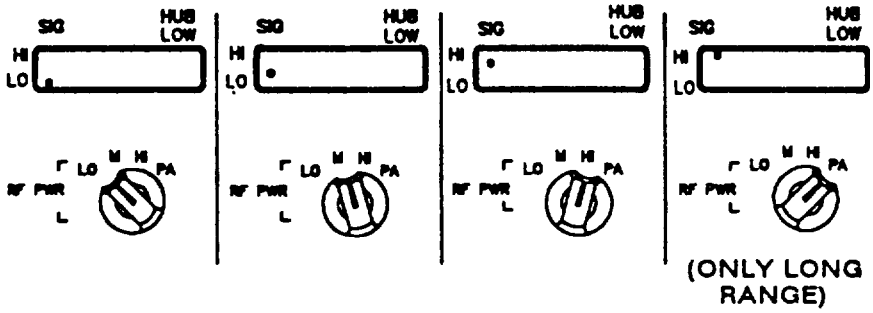 ● If SIG display flutters, replace manpack battery or have Maintenance check vehicular power source. ● If SIG marker is not as shown, rerun self-test. (See Self-Test Procedure.) if SIG marker indications remain incorrect, see Maintenance. ● If SIG display does not drop back to LO after FCTN is taken out of TST, rerun self-test. (See Self-Test Procedure.) If SIG marker remains high after self-tests, see unit maintenance.

RADIO. Sidetone	
ITEM	PROCEDURE
manpack, vehicular radio	a. Set RF to HI. b. Turn VOL full right (clockwise). c. Press handset push-to-talk and talk; then listen for sidetone. ● If you don't hear sidetone, make sure antenna connector is secure; then troubleshoot the handset. ● If there is sidetone, go to communication troubleshooting.

RADIO. Handset	
ITEM	PROCEDURE
manpack, vehicular radio	a. When possible, substitute faulty handsets for ones that you know are good; then troubleshoot for sidetone again. ● If you troubleshoot for sidetone again, and still do not hear sidetone, get unit maintenance to check radio.
vehicular radio	b. Check W4 cable(s). c. Disconnect W4 cable(s) from RT. d. Connect handset to RT AUDIDATA; then troubleshoot for sidetone again. ● If there is still no sidetone, get unit maintenance to check radio.

RADIO. Communication	
ITEM	PROCEDURE
manpack, vehicular radio	a. Set FCTN to SQ OFF. b. Set RF to HI. c. Set COMSEC to PT. d. Turn VOL full right (clockwise). e. Using the correct frequency or hopset, contact a local station or distant station. ● If contact is not made with a local station, change your location and antenna positioning. Untie vehicular antennas and try to contact local station again. ● If you cannot contact a station, get unit maintenance to check it out. ● COLD START: if contact is not made when set up for cold start, set MODE switch to SC; check for correct MAN frequency, and correct cold start TSK. if contact is not made, start troubleshooting for power source. ● If you are in secure net, set COMSEC switch to CT. Repeat this check. ● If communication was good using plain text but was bad using cipher text, get unit maintenance to check radio. f. When a rushing noise and/or COMSEC alarm are heard during communications: ● After approximately 7 seconds, radio should automatically clear. ● If it does not, pressing PTT twice should clear radio immediately. ● If rushing noise/COMSEC alarm continues, set FCTN to STBY, back to SQ ON, and press PTT twice again. ● If problem still continues, have unit maintenance check radio.

TROUBLESHOOTING PROCEDURES Continued

RADIO. Displays	
ITEM	PROCEDURES. Normal displays are not shown here: they are shown in the operating instructions in chapter 2. Do this procedure if you have no trouble communicating in your net but the RT display is not responding to keyboard actions.
manpack, vehicular radio	BAD — Indicates fill is not accepted by RT. Check fill device and procedures. FAILn — RT faulty. Get unit maintenance to check RT. (The letter " n" represents a numeral). L7, L8, L7 L8 — Required lockout set(s) missing. RT cannot transmit or receive on hopset without loading lockout set(s). TOD — Indicates FH sync time needs to be be loaded to send ERF. FQMER — Frequency management error resulting from attempt to load wrong type of hopset.

CONTROL MONITOR. Initial setup and self-test	
ITEM	PROCEDURE. If CM is found to be faulty, you can still operate your radio. Set RT FCTN to SQ ON; then operate the RT using the RT controls. When possible, get unit maintenance to check CM.
CM, radio	a. Do Initial set up procedure. • If RT does not initially set up, troubleshoot for input/output circuit and displays. b. Do self-test procedure. • If test does not end with "Gd" (good) displayed on CHAN and VAR displays of CM, refer to the display troubleshooting procedure.

CONTROL-MONITOR. Input/output circuit	
ITEM	PROCEDURE
manpack, vehicular radio	a. Connect handset to AUD/FILL connector on front of RT (intercom may be used instead). b. Set FCTN to REM. c. Press and hold CALL. d. Press handset push-to-talk (or intercom). e. Wait 12 seconds. Display must show 'CALL'. ● If display does not show "CALL", get unit maintenance to check RT. ● If display shows *CALL", but the RT did not set up during initial set up and self-test, get unit maintenance to check CM and cabling.

CONTROL-MONITOR, Functioning	
ITEM	PROCEDURE
CM, radio	a. If you have just powered up, do the Initial setup and self-test procedure. b. Do set/change procedure. ● If CONTROL display cannot be moved to M, get unit maintenance to check CM. ● If RT functions cannot be changed, make sure RT MODE on CM is not at OFF and that RT FCTN switch is set to REM. If RT MODE will not change, get unit maintenance to check CM.

TROUBLESHOOTING PROCEDURES Continued

CONTROL MONITOR. Displays	
ITEM	PROCEDURE. Normal displays are not shown here. If no solution is given, or if troubleshooting procedure does not result in a normal display, get unit maintenance to check CM.
CM	NOTE If all displays except CONTROL are blank, make sure RADIO switch is at correct setting: then set RT FCTN to REM. F 1 CHAN VAR — Indicates CM is faulty. F 2 CHAN VAR F 7 CHAN VAR — Indicates RT response failure. Set INIT to UP: then release. If "F7" remains on display: RT, CM, or interconnecting cabling is faulty. F r CHAN VAR — Indicates response failure for second CM when two are being used. E r CHAN VAR — Indicates operator error. Check operating procedure. 6 — Indicates RT channel is not loaded or RT problem exists when CHAN blinks and all other displays are normal. Check RT channel.

RCU. Self-test and functioning.	
ITEM	PROCEDURE. If no solution is given, or if troubleshooting procedure does not result in a normal display, get unit maintenance to check RCU.
RCU, radio	a. Assemble RCU and connect two-wire to radio system. b. Do self-test procedure. ● If test does not end with “GOOD”, make sure you have performed assembly procedures correctly, set RT FCTN to REM, made sure that the two-wire link is not cut, etc.; then repeat self-test. If self-test does not end in ‘GOOD”, or RCU did not place RT in self-test, turn in RCU and radio to unit maintenance. c. Do ICM procedure. ● If radio or RCU displays fail to show “CALL”, turn in radio and RCU to unit maintenance.

SECTION III. OPERATOR MAINTENANCE

ITEM	PAGE
Routine Checks	5-17
Antennas	5-17
Cables and cable connectors	5-17
Controls and switches	5-17
Mounting and assembly hardware	5-17
Cleaning	5-17
Preparation for Movement	5-18
Caution/Warning Labels and Plates	5-18

ROUTINE CHECKS

These routine checks should be done in addition to the scheduled PMCS. Always do routine checks whenever you see the need or while performing a PMCS. If a problem is found during a check, get unit maintenance to repair it. Visually inspect the equipment often.

Antennas

- Make sure antennas are clean.
- Check antenna elements for damage.
- If you have a vehicular antenna base, make sure the braided strap (ground strap) is securely installed to the vehicle and antenna base.

Cables and cable connectors

- Check cables (where visible) for cuts, cracks, and breaks.
- Make sure cable connectors are secure.
- Make sure cable connectors are securely attached to cables.

Controls and switches

- Make sure each control moves smoothly while you operate your radio.
- If a switch has detents, make sure each position has a solid feel to it.
- Make sure pull-and-turn switches cannot move to a guarded position without first being pulled out.
- Make sure all knobs are secure on their shafts.

Mounting and assembly hardware

- Check for loose nuts, bolts, and screws.
- Check for corrosion, rust, and deterioration of all metal parts.
- Should your radio give you a strange, unexplained message which does not automatically clear:
  (1) Set FCTN to STBY , then return to SQ ON. This action may clear your problem.
  (2) If it does not, and the situation permits, set FCTN to Z-FH and wait for 'GOOD", then to OFF and wait 10 seconds, then back to Z-FH and again wait for 'GOOD". Now run self-test. If "GOOD" results, reload radio and re-enter net. If problem still exists, contact unit maintenance.

CLEANING

Keep radio controls and connectors as clean as you can, especially the display window and keyboard.

PREPARATION FOR MOVEMENT

MANPACK RADIO. If you won't be using your radio, remove and stow the antenna and handset. See pages 2-18 and 2-19.

VEHICULAR RADIO. Make sure the antenna is properly tied down for routine movement in built-up areas, such as cities or in garrison or where power lines or other hazards exist. See pages 2-28 and 2-29.

CAUTION/WARNING LABELS AND PLATES

When you operate your radio, keep in mind the cautions and warnings. The ones located on your radio are shown here.

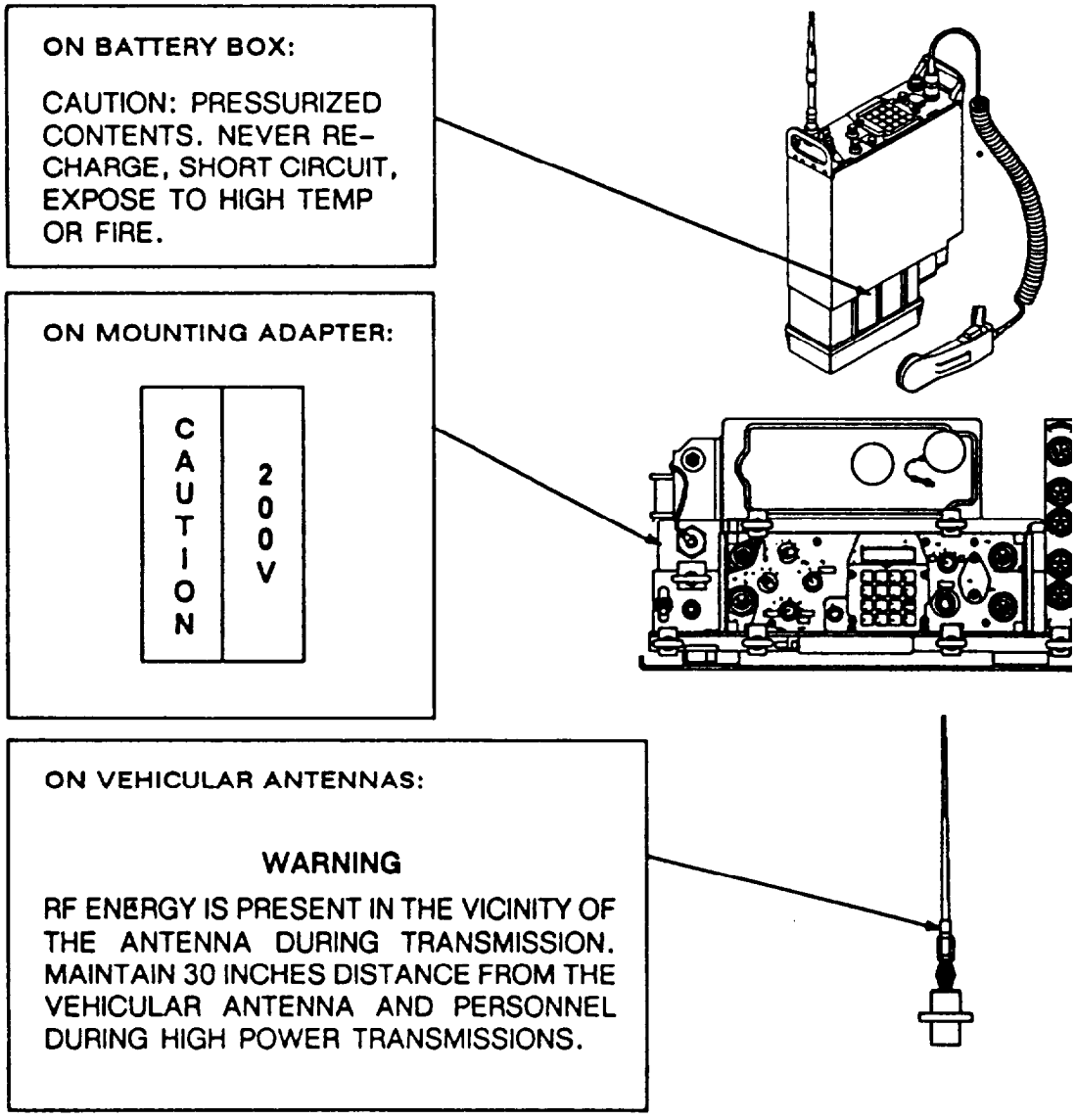

APPENDIX A
REFERENCES

SCOPE

This appendix lists all forms, field manuals, technical manuals, and miscellaneous publications referenced in this manual.

FORMS

DA Form 2028	Recommended Changes to Publications and Blank Forms.
DA Form 2028-2	Recommended Changes to Equipment Technical Publications.
SF 364	Report of Discrepancy (ROD).
SF 361	Transportation Discrepancy Report (TDR) .
SF 368	Product Quality Deficiency Report.

FIELD MANUALS

FM 21-11	Artificial Respiration.
FM 11-32	Combat Net Radio Operations.
FM 24-18	Tactical Single-Channel Radio Communications Techniques.

TECHNICAL BULLETINS

TB 11-5820-890-10-4	Variable Format Message Entry Device (AN/GSC-21)
TB 11-5820-890-10-5	Tactical Fire Direction System (AN/GSC-10)
TB 11-5820-890-10-6	Lightweight Digital Fax (AN/UXC-7)
TB 11-5820-890-10-7	Secure Net Radio Interface Unit (KY-90)
TB 11-5820-890-10-8	Battery Computer System (AN/GYK-29)
TB 11-5820-890-10-9	Digital Message Device (AN/PSG-2)
TB 11-5820-890-10-10	FIST-V Digital Message Device (AN/PSG-5)
TB 11-5820-890-10-11	Maneuver Control System (MCS)
TB 11-5820-890-10-12	Lightweight TACFIRE
TB 11-5820-890-10-13	Mortar Ballistic Computer M23 (MBC)
TB 11-5820-890-10-14	Loudspeaker LS-671
TB 380-41-5	Procedure for Safeguarding, Accounting, and Supply Control of COMSEC Material, Volume 5, Safeguarding COMSEC Material.

TECHNICAL MANUALS

TM 750-244-2	Procedure for Destruction of Electronics Materiel to Prevent Enemy Use (Electronics Command).
TM 11-5820-890-10-2	SINCGARS ICOM Ground Radio Operator's Pocket Guide.

MISCELLANEOUS PUBLICATIONS

AMDF	(AR 708-1) IAW Packaging Segment of AMDF by NSN.
AR 735-244-2	Reporting of Item and Packaging Discrepancies.
DA Pam 25-30	Consolidated Index of Army Publications and Blank Forms.
DA Pam 738-750	The Army Maintenance Management System (TAMMS).
SB 11-624	Warning Notice for Vehicles in Which Radios are Mounted.

JULIAN DATE CALENDAR (REGULAR YEAR)

DAY/MO	JAN	FEB	MAR	APR	MAY	JUN	JUL	AUG	SEP	OCT	NOV	DEC
1	01	32	60	91	21	52	82	13	44	74	05	35
2	02	33	61	92	22	53	83	14	45	75	06	36
3	03	34	62	93	23	54	84	15	46	76	07	37
4	04	35	63	94	24	55	85	16	47	77	08	38
5	05	36	64	95	25	56	86	17	48	78	09	39
6	06	37	65	96	26	57	87	18	49	79	10	40
7	07	38	66	97	27	58	88	19	50	80	11	41
8	08	39	67	98	28	59	89	20	51	81	12	42
9	09	40	68	99	29	60	90	21	52	82	13	43
10	10	41	69	00	30	61	91	22	53	83	14	44
11	11	42	70	01	31	62	92	23	54	84	15	45
12	12	43	71	02	32	63	93	24	55	85	16	46
13	13	44	72	03	33	64	94	25	56	86	17	47
14	14	45	73	04	34	65	95	26	57	87	18	48
15	15	46	74	05	35	66	96	27	58	88	19	49
16	16	47	75	06	36	67	97	28	59	89	20	50
17	17	48	76	07	37	68	98	29	60	90	21	51
18	18	49	77	08	38	69	99	30	61	91	22	52
19	19	50	78	09	39	70	00	31	62	92	23	53
20	20	51	79	10	40	71	01	32	63	93	24	54
21	21	52	80	11	41	72	02	33	64	94	25	55
22	22	53	81	12	42	73	03	34	65	95	26	56
23	23	54	82	13	43	74	04	35	66	96	27	57
24	24	55	83	14	44	75	05	36	67	97	28	58
25	25	56	84	15	45	76	06	37	68	98	29	59
26	26	57	85	16	46	77	07	38	69	99	30	60
27	27	58	86	17	47	78	08	39	70	00	31	61
28	28	59	87	18	48	79	09	40	71	01	32	62
29	29		88	19	49	80	10	41	72	02	33	63
30	30		89	20	50	81	11	42	73	03	34	64
31	31		90		51		12	43		04		65

JULIAN DATE CALENDAR (LEAP YEAR)

1	01	32	61	92	22	53	83	14	45	75	06	36
2	02	33	62	93	23	54	84	15	46	76	07	37
3	03	34	63	94	24	55	85	16	47	77	08	38
4	04	35	64	95	25	56	86	17	48	78	09	39
5	05	36	65	96	26	57	87	18	49	79	10	40
6	06	37	66	97	27	58	88	19	50	80	11	41
7	07	38	67	98	28	59	89	20	51	81	12	42
8	08	39	68	99	29	60	90	21	52	82	13	43
9	09	40	69	00	30	61	91	22	53	83	14	44
10	10	41	70	01	31	62	92	23	54	84	15	45
11	11	42	71	02	32	63	93	24	55	85	16	46
12	12	43	72	03	33	64	94	25	56	86	17	47
13	13	44	73	04	34	65	95	26	57	87	18	48
14	14	45	74	05	35	66	96	27	58	88	19	49
15	15	46	75	06	36	67	97	28	59	89	20	50
16	16	47	76	07	37	68	98	29	60	90	21	51
17	17	48	77	08	38	69	99	30	61	91	22	52
18	18	49	78	09	39	70	00	31	62	92	23	53
19	19	50	79	10	40	71	01	32	63	93	24	54
20	20	51	80	11	41	72	02	33	64	94	25	55
21	21	52	81	12	42	73	03	34	65	95	26	56
22	22	53	82	13	43	74	04	35	66	96	27	57
23	23	54	83	14	44	75	05	36	67	97	28	58
24	24	55	84	15	45	76	06	37	68	98	29	59
25	25	56	85	16	46	77	07	38	69	99	30	60
26	26	57	86	17	47	78	08	39	70	00	31	61
27	27	58	87	18	48	79	09	40	71	01	32	62
28	28	59	88	19	49	80	10	41	72	02	33	63
29	29	60	89	20	50	81	11	42	73	03	34	64
30	30		90	21	51	82	12	43	74	04	35	65
31	31		91		52		13	44		05		66

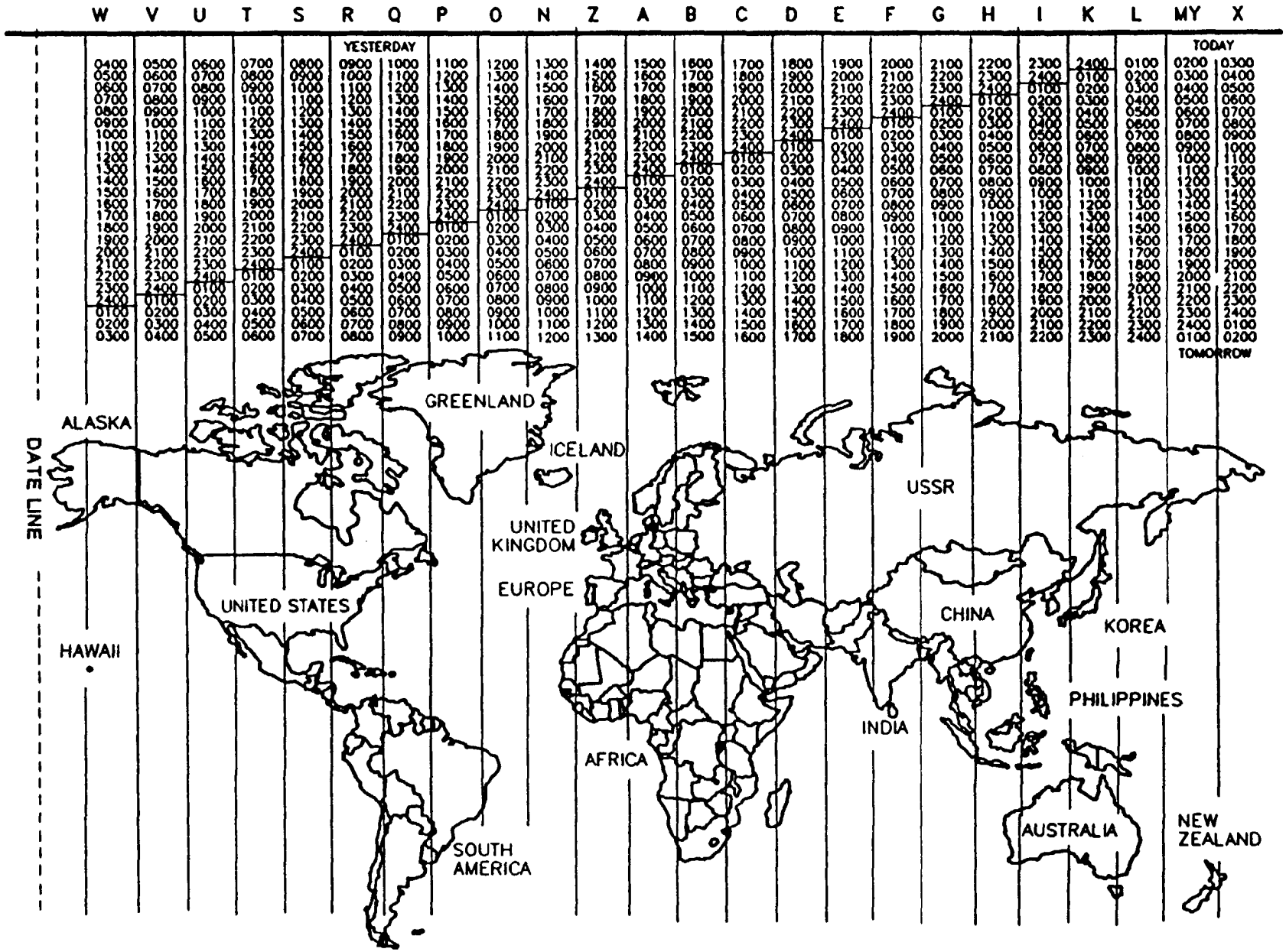
W V U T S R Q P O N Z A B C D E F G H I K L MY X
YESTERDAY
TODAY
TOMORROW
DATE LINE
ALASKA
HAWAII
GREENLAND
ICELAND
UNITED KINGDOM
EUROPE
UNITED STATES
SOUTH AMERICA
AFRICA
USSR
CHINA
INDIA
KOREA
PHILIPPINES
AUSTRALIA
NEW ZEALAND

OPERATOR ROADMAP

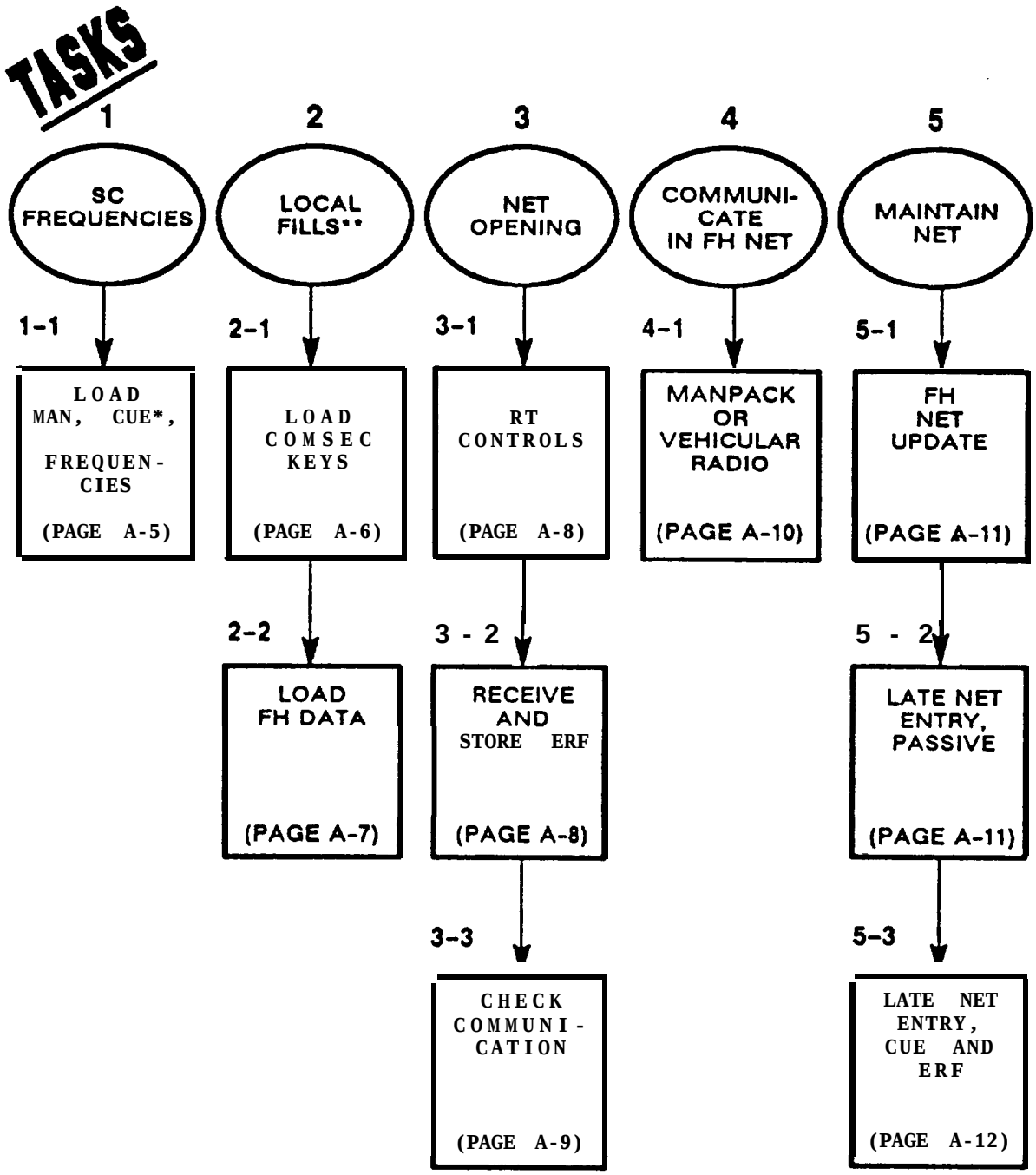

* (WHEN DESIGNATED BY COMMANDER)

** (UNIT SOP MAY CALL FOR LOCAL FILL TASKS TO BE PERFORMED BY COMMUNICATIONS SPECIALISTS OR KEY NCO'S)

FLOW CHARTS

TASK 1: SC FREQUENCIES

TASK 1-1	ACTIONS	RESULTS
LOAD: MAN, CUE*, or SC frequencies	(1) **Get:** Frequencies from SOI or NCS.	* (When designated by commander) Note: ("STO X" and "XXXXX" indicate numbers obtained from NCS or SOI)
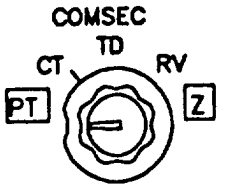	**Set:** COMSEC to PT	
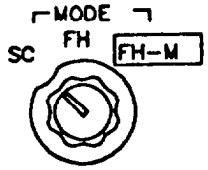	MODE to SC	
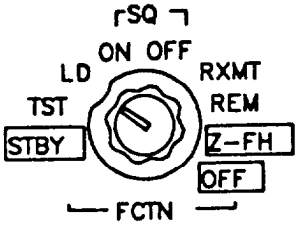	FCTN to Z-FH	Display shows "GOOD" (or contact unit maintenance)
	FCTN to LD	
	CHAN to MAN, CUE, or 1 thru 6	
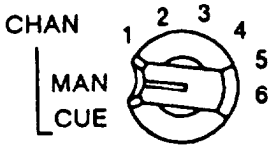	(2) **Press:** FREQ (FREQ)	Display shows "00000" or "30000"
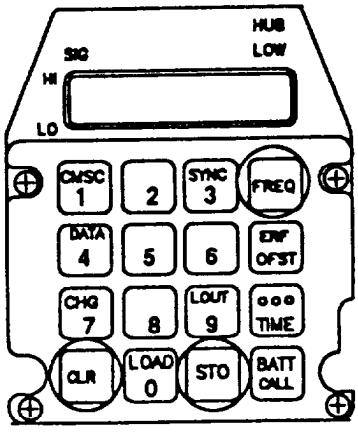	CLR (CLR)	Display shows "_ _ _ _ _"
	XXXXX (Frequency from NCS or SOI)	Display shows "XXXXX"
	(3) **Press:** STO (STO)	Display blinks* once
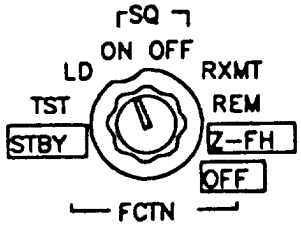	(4) **Set:** FCTN to SQ ON	SC loading is complete * Indicates data is stored

FLOW CHARTS

TASK 2: LOCAL FILLS

TASK 2-1	ACTIONS		RESULTS
LOAD: COMSEC keys AUD/FILL CONNECTOR 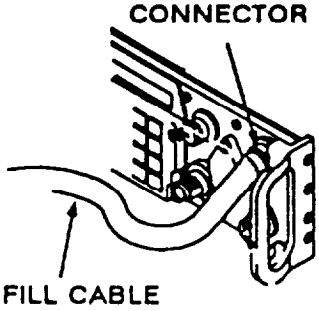 	(1) Turn:	COMSEC fill device to OFF	
	Connect:	COMSEC fill device to RT AUD/FILL connector using fill cable	
	(2) Set:	RT FCTN to LD RT MODE to SC RT CHAN to MAN RT COMSEC to CT	COMSEC alarm is heard (beeping tone)
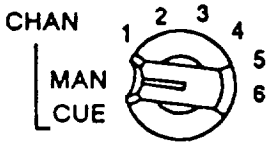 	(3) Press:	RT handset push-to-talk 2 times	COMSEC alarm changes to a steady tone
	(4) Get:	COMSEC key from SOI or NCS	
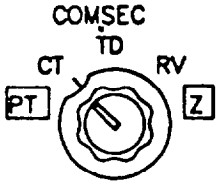 	(5) Turn:	COMSEC fill device select switch to the directed position	
	(6) Turn:	COMSEC MODE switch to ON	
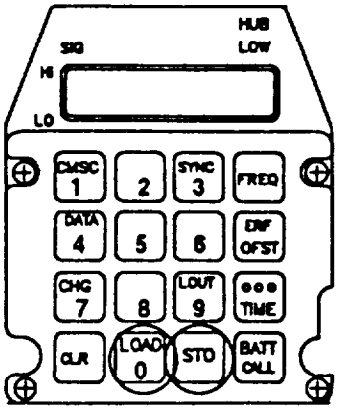 	(7) Press:	RT LOAD [LOAD 0] RT STO [STO] RT number for channel X	Display shows "LOAD" Display shows "H TEK" or "H KEK" Display shows "STO_" Display shows "STO X" and blinks once COMSEC alarm goes away
	Note: Always load channels 1 thru 6. Repeat steps 6 thru 7 for each channel to be loaded		
	(8) Turn:	COMSEC fill device to OFF	
	(9) Disconnect:	COMSEC fill device and fill cable	Fill loading is complete

FLOW CHARTS

TASK 2: LOCAL FILLS

TASK 2-2	ACTIONS	RESULTS
LOAD: FH data 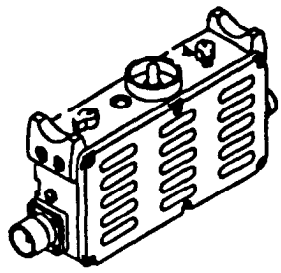	(1) Turn: ECCM fill device to OFF Connect: ECCM fill device to RT AUD/FILL connector using fill cable 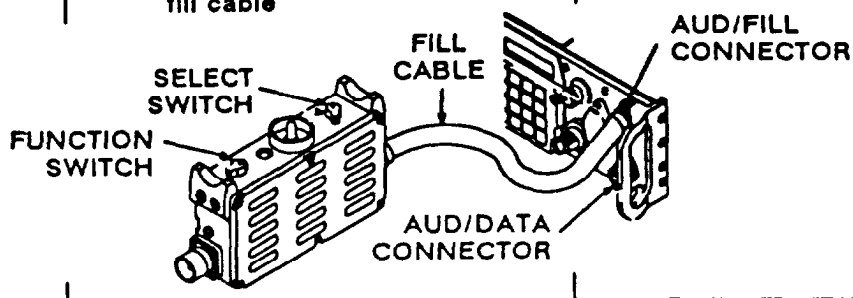	
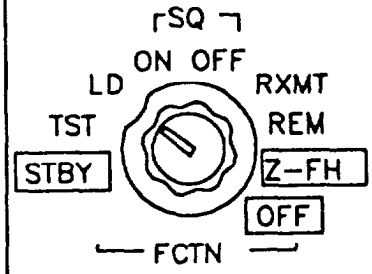	(2) Set: RT FCTN to LD RT MODE to FH RT CHAN to MAN ECCM fill device to ON ECCM fill device select switch to directed position (given to you by NCS or SOI)	Display shows "FILL 0"
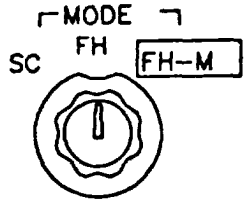	(3) Press: RT LOAD RT STO RT number for channel in which FH data is to be stored	Display shows "LOAD" then "HF XXX" Display shows "STO_" Display shows "STO X" and blinks once
	(4) Turn: ECCM fill device to OFF	
	(5) Disconnect: ECCM fill device and fill cable	
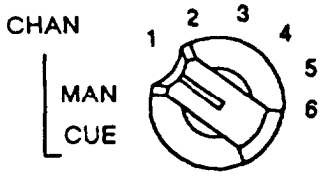	(6) Turn: RT CHAN switch to channel X to verify data is stored RT CHAN switch to MAN	Display shows "F XXX" Display shows "COLD"
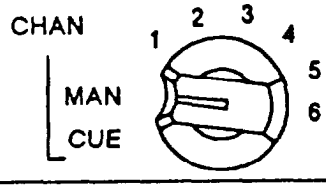	(7) Stand by: To receive instructions from NCS	Fill loading is complete

FLOW CHARTS

TASK 3: NET OPENING

TASK 3-1	ACTIONS		RESULTS
SET: RT CONTROLS	(1) Follow:	NCS directions	
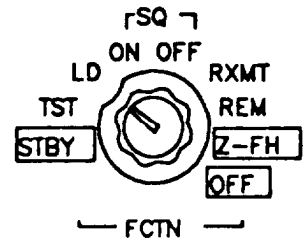	(2) Set:	FCTN to LD	
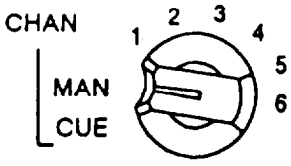		CHAN to MAN	
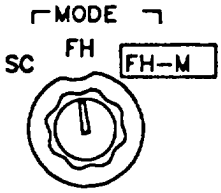		MODE to FH	Display shows "COLD"* * When display shows "COLD", RT is ready to receive ERF

TASK 3-2	ACTIONS		RESULTS
RECEIVE: ERF STORE: ERF WHERE DIRECTED/DESIRED	(1) Wait:	For NCS to send ERF	
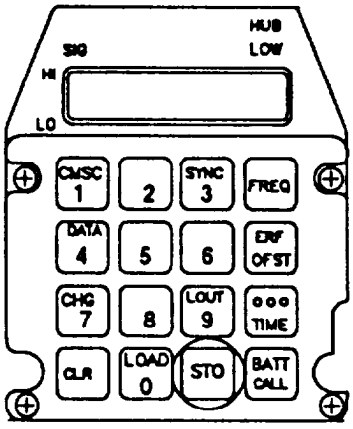		When ERF is received	Display shows "HFXXX" or "HLXXX"
	(2) Press:	STO	Display shows "STO_"
		Number (as dir-directed)	Display shows "STO X" and blinks

FLOW CHARTS

TASK 3: NET OPENING

TASK 3-3	ACTIONS		RESULTS
CHECK: COMMUNICATIONS	(1) Set:	FCTN to SQ ON	
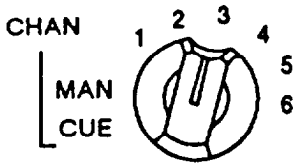	(2) Change:	CHAN switch to channel where ERF was stored	Display shows "F XXX"
	(3) Check:	Communications when NCS calls net	Reception of ERF complete Note: If NCS fails to contact you, set CHAN to MAN and stand by

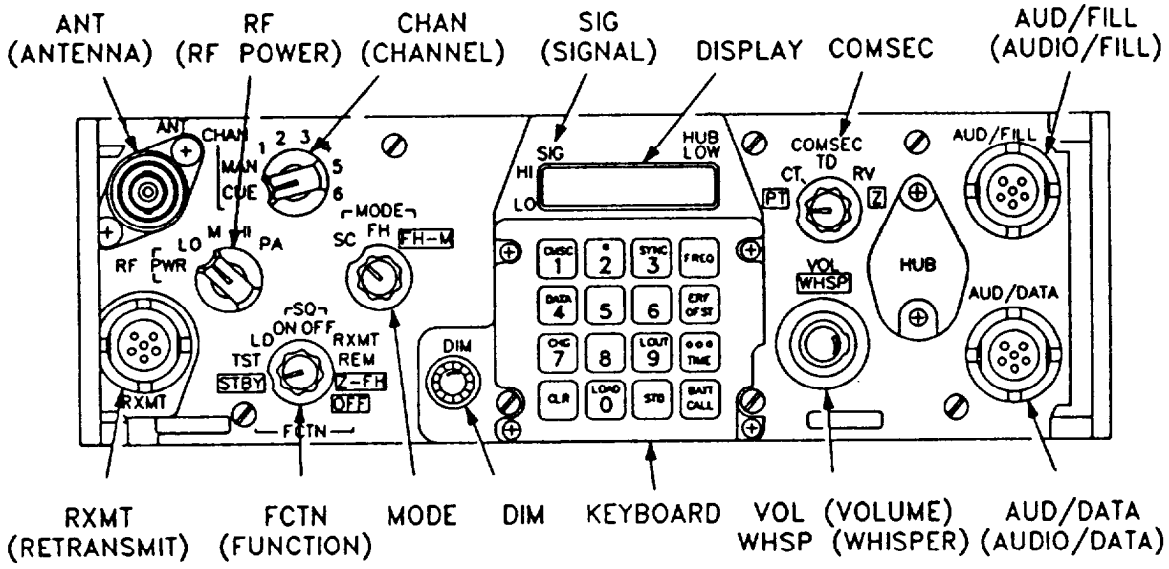

FLOW CHARTS

TASK 4: COMMUNICATE IN FH NET		
TASK 4-1	**ACTIONS**	**RESULTS**
Manpack or vehicular radio	(1) Push-to-talk	Message sent
	(2) Adjust volume to hear	Message received
	(3) Seek: Line-of-sight	Avoid loss of communication
	(4) React If jammed (see pages 2-47 thru 2-50)	Avoid loss of communication

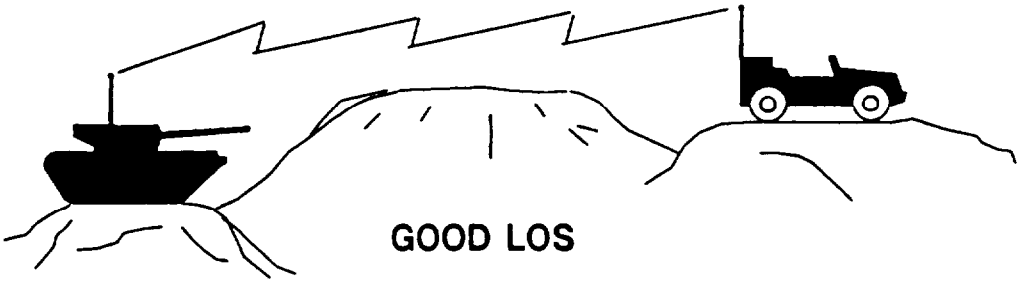

FLOW CHARTS

TASK 5: MAINTAIN NET

TASK 5-1	ACTIONS		RESULTS
<u>Receive</u>: FH net update 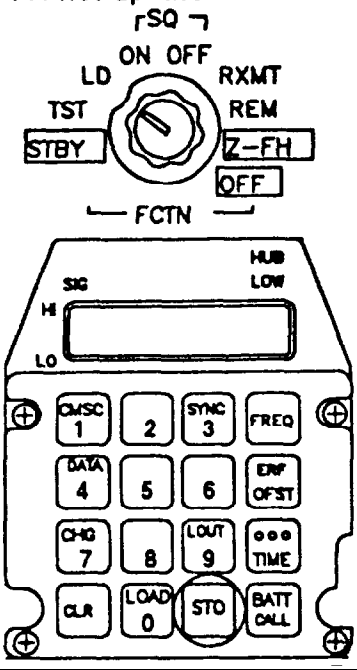	(1) <u>Follow</u>:	NCS directions	
	(2) <u>Set</u>:	RT FCTN to LD	
	(3) <u>Wait</u>:	For NCS to send ERF	Display shows "HFXXX" or "HLXXX"
	(4) <u>Press</u>:	STO [STO]	Display shows "STO_"
		Number as directed	Display shows "STO X" and blinks
	(5) <u>Stand by</u>:	For NCS instructions	

TASK 5-2	ACTIONS		RESULTS
<u>Late net entry</u>: Passive method 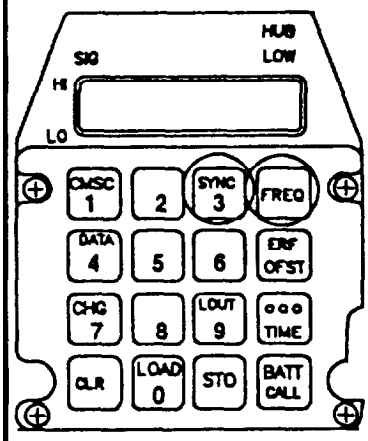	(1) <u>Press:</u>	FREQ [FREQ]	Display shows "F XXX"
		SYNC [SYNC 3]	Display shows "LF XXX"
		Note: Press SYNC again to cancel late net entry mode	
	(2) <u>Wait</u>:	For radio traffic (DO NOT PRESS PTT SWITCH)	Communication is heard Display shows "FXXX", "L" is dropped
	(3) <u>Contact</u>:	NCS for communications check	Passive late net entry is complete NOTE: If traffic is not heard after 3 minutes, proceed to CUE and ERF method

FLOW CHARTS

TASK 5: MAINTAIN NET

TASK 5-3	ACTIONS		RESULTS
Late net entry: CUE and ERF method 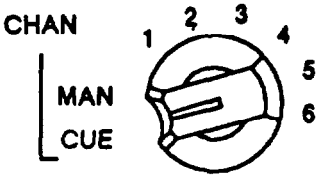 	(1) Set:	CHAN to CUE* RT COMSEC to PT	* Note: If not loaded, load proper CUE frequency
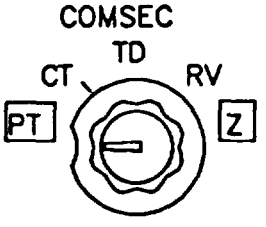 	(2) Press:	Handset push-to-talk for 4 seconds THEN, AT ONCE	
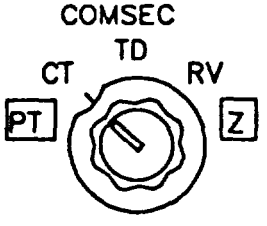 	(3) Set:	RT COMSEC to CT	
	(4) Wait:	For answer	NCS/alternate NCS will respond on CUE frequency
	(5) Repeat:	After 15 seconds until CUE call is answered	Note: Go to PT for CUE, then to CT for response
	(6) Follow:	Procedures as directed for receiving ERF	CUE and ERF late net entry is complete

APPENDIX B
COMPONENTS OF END ITEM AND BASIC ISSUE ITEMS LISTS

SECTION I. INTRODUCTION

B-1. SCOPE

This appendix lists components of end item and basic issue items for Radio Sets AN/PRC-119A and AN/VRC-87A thru AN/VRC-92A, and AN/VRC-87C, AN/VRC-88C, and AN/VRC-90C to help you inventory items required for safe and efficient operation.

B-2. GENERAL

The Components of End Item and Basic Issue Items Lists are divided into the following sections:

a. Section II. Components of End Item. This listing is for informational purposes only and is not authority to requisition replacements. These items are part of the end item, but are removed and separately packaged for transportation or shipment. As part of the end item, these items must be with the end item whenever it is issued or transferred between property accounts. The list is divided into sublistings for each radio set. Illustrations are furnished to assist you in identifying the items.

b. Section III. Basic Issue Items. These are the minimum essential items required to place the radio set in operation, to operate it, and to perform emergency repairs. Although shipped separately packaged, BII must be with the radio set during operation and whenever it is transferred between property accounts. The illustrations will assist you with hard-to-identify items. This manual is your authority to request requisition replacement BII, based on TOE/MTOE authorization of the end item.

B-3. EXPLANATION OF COLUMNS

The following explains the columns found in the tabular listings.

a. Column (1), Illustration Number (Illus No.). This column indicates the number of the illustration showing the item.

b. Column (2), National Stock Number. This column indicates the national stock number assigned to the item and will be used for requisitioning purposes.

c. Column (3), Description. This column indicates the federal item name and if required, a minimum description to identify and locate the item. The last line for each item indicates the CAGEC (in parentheses), followed by the part number.

d. Column (4), Unit of Measure (U/M). This column indicates the measure used in performing the actual operational maintenance function. This measure is expressed by a two-character alphabetical abbreviation (e.g., ea, in, pr).

e. Column (5), Quantity Required (Qty Reqd). This column indicates the quantity of the item authorized to be used with/on the equipment.

SECTION II. COMPONENTS OF END ITEM

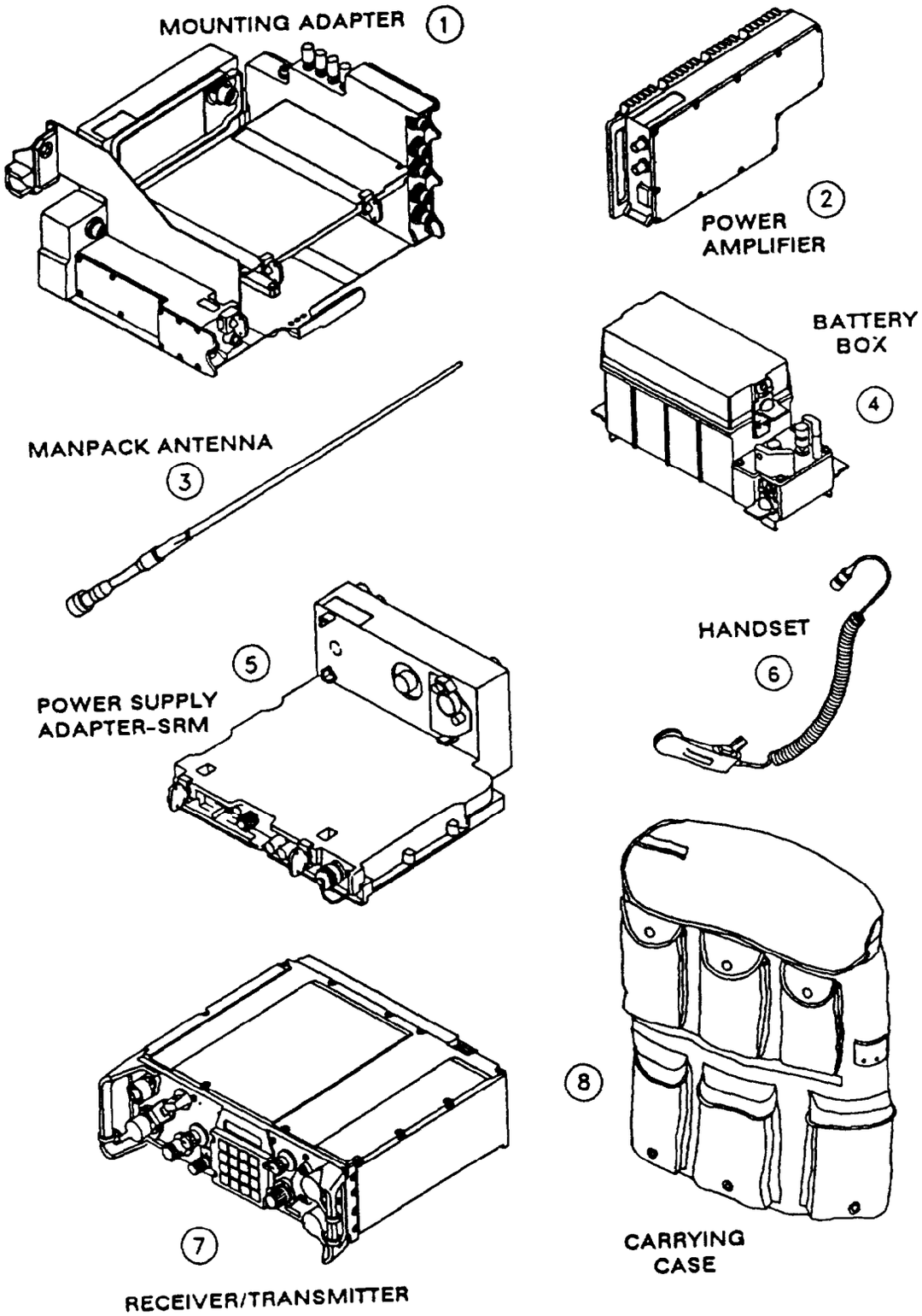

SECTION II. COMPONENTS OF END ITEM Continued

CONTROL CABLE
CX-13291

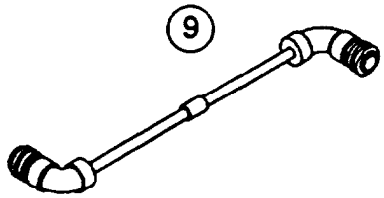

RF CABLE
CG-3856

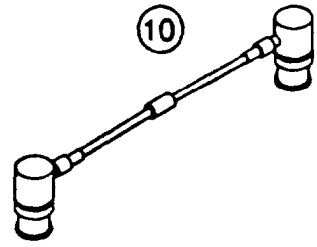

W2 CABLE

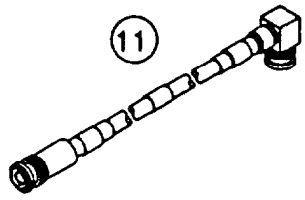

W4 CABLE

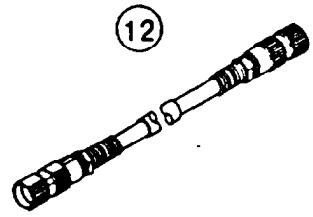

POWER CABLE
(BETWEEN MOUNTS)
CX-13303

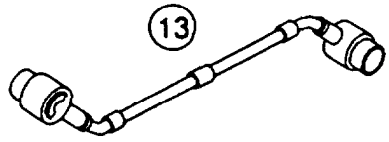

MOUNTING BASE
MT-6353

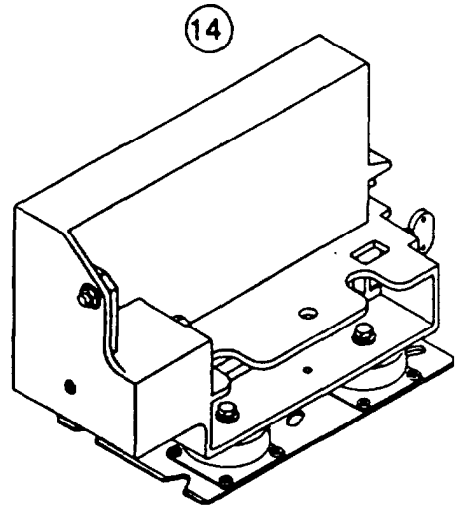

SPECIAL PURPOSE
CABLE
CX-13314

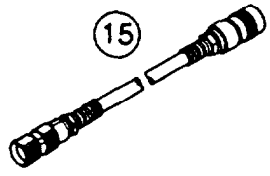

SPECIAL PURPOSE
CABLE
CX-13298

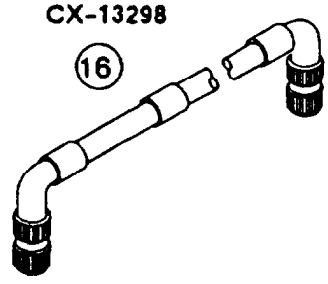

SECTION II. COMPONENTS OF END ITEM Continued

(1) Illus No.	(2) National Stock Number	(3) Description (CAGEC) and Part Number	(4) U/M	(5) Qty Reqd
	5820-01-267-9482	RADIO SET AN/PRC-119A		
3	5985-01-235-9189 5985-01-304-2024 5985-01-340-1043	ANTENNA, MANPACK: AS-3683/PRC (80063) A301 3355-1 AS-3683A/PRC, (80063) A31 32025-1 AS-4266/PRC, (80063) A3167657-1	ea	1
4	6160-01-284-4200 6160-01-304-2034	BATTERY BOX : CY-8523A/PRC (80063) A3018381-1 CY-8323B/PRC, (80063) A3132600-1	ea	1
6	5965-00-043-3463	HANDSET: (80058) H-250/U	ea	1
7	5895-01-234-8093 5820-01-318-7990	RECEIVER-TRANSMITTER. RADIO: RT-1523(C)/U (80063) A3018860-1 RT-1523A(C)/U, (80063) A3131300	ea	1
8	5820-01-322-3477	CARRYING CASE, RADIO (80063) A3142076-1	ea	1
	5820-01-267-9480	RADIO SET AN/VRC-87A		
1	5895-01-188-8819 5895-01-304-8389 5895-01-334-3164	AMPLIFIER-ADAPTER, VEHICULAR (mounting adapter) : AM-7239/VRC (80063) A3013365-1 AM-7239A/VRC, (80063) A3132035-1 AM-7239B/VRC, (60063) A3148136-1	ea	1
12	5995-01-310-0335	CABLE ASSEMBLY, SPECIAL PURPOSE, ELECTRICAL (W-4, RT to amplifier-adapter) (80063) A3013735-5	ea	1
7	• 5895-01-234-8093 5820-01-318-7990	RECEIVER-TRANSMITTER, RADIO: RT-1523(C)/U (80063) A3018860-1 RT-1523A(C)/U, (80063) A3131300	ea	1
	5820-01-267-9481	RADIO SET AN/VRC-88A		
1	5895-01-188-8819 5895-01-304-8389 5895-01-334-3164	AMPLIFIER-ADAPTER, VEHICULAR (mounting adapter) AM-7239/VRC, (80063) A3013365-1 AM-7239A/VRC, (80063) A3132035-1 AM-7239B/VRC, (80063) A3148136-1	ea	1
3	5985-01-235-9189 5985-01-304-2024 5985-01-340-1043	ANTENNA, MANPACK: AS-3683/PRC (80063) A3013355-1 AS-3683A/PRC, (80063) A3132025-1 AS-4266/PRC, (80063) A3167657-1	ea	1
4	6160-01-284-4200 6160-01-304-2034	BATTERY BOX : CY-8523A/PRC (80063) A3018381-1 CY-8323B/PRC, (80063) A3132600-1	ea	1
12	5995-01-310-0335	CABLE ASSEMBLY, SPECIAL PURPOSE, ELECTRICAL (W-4, RT to amplifier-adapter) (80063) A3013735-5	ea	1

• See NOTE 1, page C-2.

SECTION II. COMPONENTS OF END ITEM Continued

(1) Illus No.	(2) National Stock Number	(3) Description (CAGEC) and Part Number	(4) U/M	(5) Qty Reqd
	5820-01-267-9481	RADIO SET AN/VRC-88A (Continued)		
6	5965-00-043-3463	HANDSET: (80058) H-250/U	ea	1
7	* 5895-01-234-8093 5820-01-318-7990	RECEIVER-TRANSMITTER, RADIO: RT-1523(C)/U (80063) A3018860-1 AT-1523A(C)/U, (80063) A3131300	ea	1
8	5820-01-322-3477	CARRYING CASE, RADIO (80063) A3142076-1	ea	1
	5820-01-267-9479	RADIO SET AN/VRC-89A		
1	5895-01-188-8819 5895-01-304-8389 5895-01-334-3164	AMPLIFIER-ADAPTER. VEHICULAR (mounting adapter) : AM-7239/VRC (80063) A3013365-1 AM-7239A/VRC, (80063) A3132035-1 AM-7239B/VRC, (80063) A3148136-1	ea	1
2	5895-01-195-4844 5895-01-306-8093	AMPLIFIER, RADIO FREQUENCY: AM-7238/VRC, (80063) A3013357-1 AM-7238A/VRC, 980063) A3132135-1	ea	1
11	5995-01-304-2026	CABLE ASSEMBLY, RADIO FREQUENCY (80063) A3013824-2/-3 (W2, RT ANT J1 to POWER AMP J2)	ea	1
12	5995-01-310-0335	CABLE ASSEMBLY, SPECIAL PURPOSE, ELECTRICAL (W-4, RT to amplifier-adapter) (80063) A3013735-5	ea	2
7	* 5895-01-234-8093 5820-01-318-7990	RECEIVER-TRANSMITTER, RADIO: RT-1523(C)/U (80063) A3018860-1 RT-1523A(C)/U, (80063) A3131300	ea	2
	5820-01-268-5105	RADIO SET AN/VRC-90A		
1	5895-01-188-8819 5895-01-304-8389 5895-01-334-3164	AMPLIFIER-ADAPTER, VEHICULAR (mounting adapter) : AM-7239/VRC (80063) A3013365-1 AM-7239A/VRC, (80063) A3132035-1 AM-72398/VRC, (80063) A3148136-1	ea	1
2	5895-01-195-4844 5985-01-306-8093	AMPLIFIER, RADIO FREQUENCY: AM-7238/VRC, (80063) A3013357-1 AM-7238A/VRC, (80063) A3132135-1	ea	1
11	5995-01-304-2026	CABLE ASSEMBLY, RADIO FREQUENCY (W2, RT ANT J1 to POWER AMP J2) (80063) A3013824-2/-3	ea	1
12	5995-01-310-0335	CABLE ASSEMBLY, SPECIAL PURPOSE. ELECTRICAL (W-4, RT to amplifler-adapter) (80063) A3013735-5	ea	1

* See NOTE 1, page C-2.

SECTION II. COMPONENTS OF END ITEM Continued

(1) Illus No.	(2) National Stock Number	(3) Description (CAGEC) and Part Number	(4) U/M	(5) Qty Reqd
	5820-01-268-5105	**RADIO SET AN/VRC-90A** Continued		
7	• 5895-01-234-8093 5820-01-318-7990	RECEIVER-TRANSMITTER, RADIO: RT-1523(C)/U (80063) A3018860-1 RT-1523A(C)/U, (80063) A3131300	ea	1
	5820-01-267-9478	**RADIO SET AN/VRC-91A**		
1	5895-01-188-8819 5895-01-304-8389 5895-01-334-3164	AMPLIFIER-ADAPTER, VEHICULAR (mounting adapter): AM-7239/VRC (80063) A3013365-1 AM-7239A/VRC, (80063) A3132035-1 AM-7239B/VRC, (80063) A3148136-1	ea	1
2	5895-01-195-4844 5895-01-306-8093	AMPLIFIER, RADIO FREQUENCY: AM-7238/VRC, (80063) A3013357-1 AM-7236A/VRC, 980063) A3132135-1	ea	1
3	5985-01-235-9189 5985-01-304-2024 5985-01-340-1043	ANTENNA, MANPACK: AS-3683/PRC (80063) A3013355-1 AS-3683A/PRC, (80063) A3132025-1 AS-4266/PRC, (80063) A3167657-1	ea	1
4	6160-01-284-4200 6160-01-304-2034	BATTERY BOX: CY-8523A/PRC (80063) A3018381-1 CY-8323B/PRC, (80063) A3132600-1	ea	1
6	5965-00-043-3463	HANDSET: (80058) H-250/U	ea	1
7	• 5895-01-234-8093 5820-01-318-7990	RECEIVER-TRANSMITTER, RADIO: RT-1523 (C)/U (80063) A3018860-1 RT-1523A(C)/U. (80063) A3131300	ea	2
8	5820-01-322-3477	CARRYING CASE, RADIO (80063) A3142076-1	ea	1
11	5995-01-304-2026	CABLE ASSEMBLY, RF (W2, RT to AM-7238 or AM-7238A) (80063) A3013824-2/-3	ea	1
12	5995-01-310-0335	CABLE ASSEMBLY, SPECIAL PURPOSE, ELECTRICAL (W-4, RT to amplifier-adapter) (80063) A3013735-5	ea	2

• See NOTE 1, page C-2.

SECTION II. COMPONENTS OF END ITEM Continued

(1) Illus No.	(2) National Stock Number	(3) Description (CAGEC) and Part Number	(4) U/M	(5) Qty Reqd
	5820-01-267-9477	RADIO SET AN/VRC-92A		
1	5895-01-188-8819 5895-01-304-8389 5895-01-334-3164	AMPLIFIER-ADAPTER, VEHICULAR (mounting adapter) : AM-7239/VRC (80083) A3013365-1 AM-7239A/VRC, (80083) A3132035-1 AM-7239B/VRC, (80083) A3146136-1	ea	1
2	5895-01-195-4844 5695-01-306-8093	AMPLIFIER, RADIO FREQUENCY: AM-7238/VRC, (80083) A3013357-1 AM-7238A/VRC, 980063) A3132135-1	ea	2
10	5995-01-219-7025	CABLE ASSEMBLY, RADIO ELECTRICAL: CG-3856/VRC (80063) A3014032-3	ea	1
13	5995-01-300-9324	CABLE ASSEMBLY, POWER, ELECTRICAL: CX-13303/VRC (80063) A3014040-9	ea	1
11	5995-01-304-2026	CABLE ASSEMBLY, RADIO FREQUENCY (W2, RT ANT J1 to POWER AMP J2) (80063) A3013824-2/-3	ea	1
12	5995-01-310-0335	CABLE ASSEMBLY, SPECIAL PURPOSE, ELECTRICAL (W-4, RT to amplifier-adapter) (80063) A3013735-5	ea	2
9	5995-01-222-4209	CABLE ASSEMBLY, SPECIAL PURPOSE, ELECTRICAL: CX-13291/VRC (80083) A3014037	ea	1
16	5995-01-224-0016	CABLE ASSEMBLY, SPECIAL PURPOSE, ELECTRICAL: CX-13298/VRC (60083) A3014033-1	ea	1
14	5975-01-235-1962	MOUNTING BASE, ELECTRICAL EQUIPMENT: MT-6353/VRC (80083) A3014053-1	ea	1
7	* 5895-01-234-8093 5820-01-318-7990	RECEIVER-TRANSMITTER, RADIO: RT-1523(C)/U (80083) A3018860-1 RT-1523A(C)/U, (80083) A3131300	ea	2
	5820-01-304-2045	RADIO SET AN/VRC-87C		
5	6130-01-284-4195	ADAPTER, POWER SUPPLY MX-10862/VRC (80063) A3018352-1	ea	1
15	5995-01-323-2729	CABLE ASSEMBLY, SPECIAL PURPOSE, ELECTRICAL: CX-13314/VRC (60083) A3142069-1	ea	1
7	5895-01-234-8093 5820-01-318-7990	RECEIVER-TRANSMITTER, RADIO: RT-1523(C)/U (80083) A3018860-1 RT-1523A(C)/U, (80083) A3131300	ea	1

* See NOTE 1, page C-2.

SECTION II. COMPONENTS OF END ITEM Continued

(1) Illus No.	(2) National Stock Number	(3) Description (CAGEC) and Part Number	(4) U/M	(5) Qty Reqd
	5820-01-304-2044	**RADIO SET AN/VRC-88C**		
5	6130-01-284-4195	ADAPTER, POWER SUPPLY MX-10862/VRC (80063) A3018352-1	ea	1
3	5985-01-235-9189	ANTENNA, MANPACK: AS-3683/PRC, (80063) A3013355-1	ea	1
4	6160-01-284-4200 6160-01-304-2034	BATTERY BOX: CY-8523A/PRC, (80063) A3018381-1 CY-8523B/PRC, (80063) A3132600-1	ea	1
15	5995-01-323-2729	CABLE ASSEMBLY, SPECIAL PURPOSE ELECTRICAL: CX-13314/VRC (80063) A3142069-1	ea	1
6	5965-00-043-3463	HANDSET: (80058) H-250/U	ea	1
8	5820-01-322-3477	CARRYING CASE, RADIO (80063) A3142076-1	ea	1
7	* 5895-01-234-8093 5820-01-318-7990	RECEIVER-TRANSMITTER, RADIO: RT-1523(C)/U (80063) A3018860-1 RT-1523A(C)/U, (80063) A3131300	ea	1

*See NOTE 1, page C-2.

SECTION III. BASIC ISSUE ITEMS

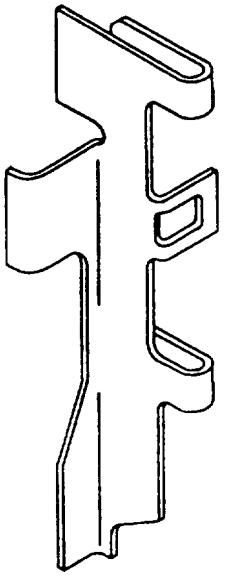

(1) Illus No.	(2) National Stock Number	(3) Description (CAGEC) and Part Number	(4) U/M	(5) Qty Reqd
1	5975-01-201-7147	BAR, RETAINING (applicable to vehicular installations of radio sets AN/VRC-87A, AN/VRC-88A, AN/VRC-89A, AN/VRC-90A. AN/VRC-91A and AN/VRC-92A) PUBLICATIONS FOR RADIO SET AN/PRC-119A, AN/VRC-87A, AN/VRC-87C, AN/VRC-88A, AN/VRC-88C, AN/VRC-89A, AN/VRC-90A, AN/VRC-91A, AN/VRC-92A	ea	1

SECTION III. BASIC ISSUE ITEMS

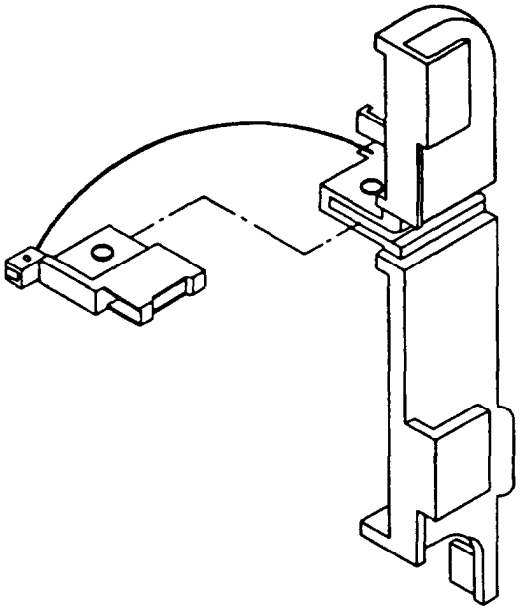

(1) Illus No.	(2) National Stock Number	(3) Description (CAGEC) and Part Number	(4) U/M	(5) Qty Reqd
1	0000-00-000-0000	BAR, RETAINING (applicable to vehicular Installations of radio sets AN/VRC-87A, AN/VRC-88A, AN/VRC-89A, AN/VRC-90A, AN/VRC-91A and AN/VRC-92A) PUBLICATIONS FOR RADIO SET AN/PRC-119A, AN/VRC-87A, AN/VRC-87C, AN/VRC-88A, AN/VRC-88C, AN/VRC-89A, AN/VRC-90A, AN/VRC-91A, AN/VRC-92A	ea	1

APPENDIX C
ADDITIONAL AUTHORIZATION LIST

SECTION I. INTRODUCTION

C-1. SCOPE

This appendix lists additional items you are authorized for the support of Radio Sets AN/PRC-119A and AN/VRC-87A through AN/VRC-92A, and AN/VRC-87C and AN/VRC-88C.

C-2. GENERAL

This list identifies items that do not have to accompany the radio set and that do not have to be turned in with it. These items are all authorized to you by CTA, MTOE, TDA, or JTA.

C-3. EXPLANATION OF LISTING

National stock numbers, descriptions, and quantities are provided to help you identify and request the additional items you require to support this equipment. The items are listed in alphabetical sequence by item name.

SECTION II. ADDITIONAL AUTHORIZATION LIST

(1) National Stock Number	(2) Description (CAGEC) and Part Number	(3) U/M	(4) Qty Auth
5985-01-340-1043	ANTENNA, MANPACK, AS-4266/PRC A31 67657-1 (extended range)	ea	1
6135-01-214-6441	BATTERY, NON-RECHARGEABLE BA-5372/U (hold up battery) (80058) BA-5372/U	ea	1
6135-01-038-3495	BATTERY, NON-RECHARGEABLE (80058) BA-5590A/U (Lithium) (manpack radio primary power battery)	ea	1
6140-01-331-4014	BATTERY, RECHARGEABLE: BB490/U W/CHARGER	ea ea	2 1
6140-01-331-4013	BATTERY, RECHARGEABLE: BB490/U	ea	1
6135-01-063-3918	BATTERY, RECHARGEABLE: BB 590/U (manpack radio secondary power battery (80056) BB 590/U	ea	1
5810-01-066-7587	CABLE, FILL (ECCM fill cable) (98230) ON512424	ea	1
5995-01-303-0308	CABLE ASSEMBLY, SPECIAL PURPOSE, ELECTRICAL CX-13308/VRC (AN/PSG-2, 2A, and 5 adapter cable) (60083) A3018355-1	ea	1

SECTION II. ADDITIONAL AUTHORIZATION LIST Continued

(1) National Stock Number	(2) Description (CAGEC) and Part Number	(3) U/M	(4) Qty Auth
5995-01-244-0016	CABLE ASSEMBLY, SPECIAL PURPOSE, ELECTRICAL CX-13298/VRC (80063) A3014033-1 (0 FT. 5 IN)	ea	1
5995-01-286-2701	CABLE ASSEMBLY, SPECIAL PURPOSE, ELECTRICAL CX-13298/VRC (80063) A3014033-2 (15 FT, 0 IN)	ea	1
5995-01-312-7932	CABLE ASSEMBLY, SPECIAL PURPOSE, ELECTRICAL CX-13310	ea	1
	CABLE ASSEMBLY, SPECIAL PURPOSE, ELECTRICAL (KY-90) CX-13404/VRC A3147971-1	ea	1
5895-01-270-3935	FILL DEVICE, ELECTRONIC COUNTER COUNTERMEASURES MX-18290/VRC (80063) A3017875-1	ea	**
5810-01-026-9622	ADAPTER, WIRE LINE: HYX-57/TSEC (98230) ON241760	ea	1
	INSTALLATION KIT. ELECTRONIC EQUIPMENT MK- (mounts AN/VRC-87A through AN/VRC-92P radio sets and ancillary equipment In vehicles) (80063) REFER TO DA PAM 25-30 FOR LISTINGS OF INDIVIDUAL KITS.	ea	1

* NOTE 1: The receiver-transmitter (RT), a functional component of all SINCGARS radio configuratlons, has been changed from a Component of End Item (COEI) to Additional Authorization List (AAL) status as an interim supply procedure to meet the accounting requirements of the RT as a Controlled Cryptographic Item (CCI). To you, the user, this means that RTs must be Issued and accounted for as separate items. This supply procedure In no way changes the functional configuration or the capabillities of the SINCGARS radio. It is anticipated that the RT will be returned to CEOI status in the near future.

** This item Issued at a rate of 1 for every 4 configurations.

APPENDIX E
REFERENCE DATA
(NOMENCLATURE CROSS-REFERENCE LIST, ABBREVIATIONS, AND GLOSSARY)

REFERENCE DATA

NOMENCLATURE CROSS-REFERENCE LIST

COMMON NAME	Official Nomenclature
Battery (HUB)	Battery, Non-rechargeable, BA-5372/U
Battery (primary)	Battery BA-5590/U (Lithium)
Battery box	Battery Box CY-8523/PRC, CY-8523A/PRC, or Battery Box CY-8523B/PRC
Battery tray	Tray, Battery CY-8664/VRC
Control-monitor	Control-Monitor C-11291/VRC or C-11291A/VRC
Dismount radios	AN/VRC-88A, AN/VRC-88C and AN/VRC-91A
ECCM fill device	Fill Device, Electronic Counter-Countermeasures MX-18290/VRC
Field pack	Carrying Case, Radio
Handset	Handset H-250/U
Loudspeaker	Loudspeaker-Control Unit LS-671/VRC, or Loudspeaker LS-685/U
Manpack antenna	Antenna, Manpack AS-3683/PRC, AS-3683A/PRC or AS-4266/PRC (extended range)
Manpack radio	AN/PRC-119A
Mounting adapter	Amplifier-Adapter, Vehicular AM-7239/VRC, AM-7239A/VRC or AM-7239B/VRC
Mounting base	Mounting Base, Electrical Equipment MT-6352/VRC or MT-6352A/VRC
Power amplifier mount	Mounting Base, Electrical Equipment MT-6353/VRC
Power amplifier	Amplifier, Radio Frequency AM-7238/VRC or AM-7238A/VRC
Power supply adapter	Adapter, Power Supply MX-10862/VRC
Radio	Receiver-Transmitter, Radio RT-1523 (C)/U or RT-1523A(C)/U
Remote control unit	Control, Receiver-Transmitter (RCU) C-11561(C)/U
Single radio mount	Mounting Base, Electrical Equipment MT-6576/VRC
Vehicular antenna	Antenna, Vehicular AS-3684/VRC, or Antenna, Vehicular AS-3900/VRC or AS-3900A/VRC, or AS-3916/VRC (low profile, survivable)
Vehicular radio	AN/VRC-87A, 87C, 88A, 88C, 89A, 90A, 91A, and 92A
VIC system	Intercommunication Set AN/VIC-1(V)
Wire line adapter	Adapter, Wire Line: HYX-57/TSEC

REFERENCE DATA Continued

ABBREVIATIONS

NOTE

For information on abbreviated function controls, refer to applicable equipment's Operator's Controls, Indicators, and Connectors section.

ABBREVIATION	TERM
AAL	additional authorization list
A/D	audio/data
A/F	audio/fill
ANT	antenna
ATTN	attention
AUD	audio
BATT	battery
BII	basic issue item
C	cue
CCI	controlled cryptographic item
CDR	commander
CH	channel
CHAN	channel
CHG	change
CKT BKR	circuit breaker
CLR	clear
CM	control-monitor/centimeters
COEI	component of end item
COMSEC	communications security
CT	cipher text
CVC	combat vehicle crewman
DA	Department of the Army
DN	down
ECCM	electronic counter-countermeasures
EIR	equipment improvement recommendation
ER	error
ERF	electronic remote fill
FCTN	function
FH	frequency hopping
FIST-V	fire support vehicle
FM	frequency modulation
FQMER	frequency management error
FR	response failure
FREQ	frequency

ABBREVIATIONS. Continued

ABBREVIATION	TERM
GD	good
HI	high
HR	hand receipt
HUB	hold up battery
HZ	hertz
ICM	intercom
ID	identification
IF	intermediate frequency
IN	inch
INIT	initiate
KEK	key encryption key (COMSEC key)
KG	kilogram
KHZ	kilohertz
LB	pound
LD	load
LO	low
LOS	line-of-sight
LOUT	lockout
LR	long range
LR/LR	long range/long range
M	medium
MAN	manual
MHZ	megahertz
MP	manpack
NCS	net control station
NRI	net radio interface
OFST	offset
OW	"order wire"
PA	power amplifier
PAM	pamphlet
PM	permanent memory
PMCS	preventive maintenance checks and services
PT	plain text
PTT	push-to-talk
PWR	power
RAD	radio
RCU	remote control unit
RCV	receive
REC	receive
REM	remote
RF	radio frequency

REFERENCE DATA Continued

ABBREVIATIONS. Continued

ABBREVIATION	TERM
ROD	report of discrepancy
RT	receiver-transmitter
RV	receive variable
RWI	radio wire integration
RXMT	retransmit
SC	single channel
SIG	signal
SINCGARS	single channel ground and airborne radio system
SOI	signal operating instructions
SOP	standing operating procedure
SQ	squelch
SPKR	speaker
SR	short range
SR-D	short range with dismount
SR/LR	short range/long range
SR/LR-D	short range/long range with dismount
STBY	standby
ST0	store
SYNC	synchronize
TB	technical bulletin
TD	time delay
TDR	transportation discrepancy report
TEK	traffic encryption key (COMSEC key)
TM	technical manual
TOD	sync time
TRANS	transmission
TSK	transmission security key
TST	test
UD	update
VHF	very high frequency
VIC	vehicle intercom system
VOL	volume
WHSP	whisper
XMIT	transmit
Z	zero
ZA	zero all
Z-FH	zero frequency hopping data

GLOSSARY

TERM	DEFINITION
battery life	Approximate rating of how much energy a battery can deliver before its useful life is finished.
channel	Circuit in RT in which a frequency and/or hopset can be loaded and stored.
cold start net opening	Method used to initially open a net.
cold start TSK	Transmission security key (TSK), which, when combined with proper switch settings will result in “COLD” display. When ‘COLD” is displayed, it is possible to begin cold start net opening.
COMSEC key	Variable used to encrypt/decrypt signals during a secure operation. TEK and KEK are COMSEC keys.
CUE	Used to contact a FH radio net when you are not an active member of that net. Cue can be used if you are operating in SC and wish to contact an FH net.
ECCM	Method of operation used to reduce the effects of jamming.
Electronic remote fill (ERF)	Method in which an RT is loaded with FH data transmitted by an NCS (net control station) radio; used during cold start openings and FH data updating.
FH frequency data	Data the RT operates on during frequency hopping: includes hopsets, lockout sets, FH sync time, TSK, TEK, and KEK.
FH sync time	Clock in RT used for timing FH operations. The NCS is the timekeeper for net RT clocks.
frequency hopping (FH) operation	ECCM method of operation. RT circuits automatically change frequencies rapidly.
holding memory	Memory in the RT used when sending, loading or retrieving FILL data.
line-of-sight (LOS)	During operation, radio antennas MUST be able to be seen by each other for good communication. The path between the radio antennas is referred to as LOS.
lockout set	Data which prevents transmission/reception *on* particular frequencies; used for FH by all RT using the hopset that needs the lockout set (may not be needed for some hopsets).

master radio	Radio in a FH radio net which is operated in FH-M mode; normally operated by the NCS.
member radio	Any radio in a FH radio net that is not the master radio.
net ID	Identifier of a FH radio net.
offset	To change a SC operating frequency by adding or subtracting 5 or 10 kHz; often done to reduce the effects of jamming or interference.
preset channel	Channel into which frequency or hopset loaded.
remote fill (COMSEC)	Transmitting a COMSEC key from KYX-15 to net member's radios (remote fill of COMSEC keys).
scanning	Radio process of searching for SC broadcasts.
scrolling	Procedure for changing COMSEC key.
secure operation	Communication using encryption/decryption of voice and data signals.
sidetone	Background audio you hear in earpiece when keying the transmitter and talking into mic.
single channel (SC)	RT method of operation using one selected frequency.
squelch	Circuit in RT that eliminates the rushing sound in earpiece or loudspeaker when no real signal is being received.
zero all	Operating procedure performed to clear all preset SC and FH data from RT memories; also clears TSK.

INDEX

SUBJECT PAGE

A

Abbreviations E-2
Adapter, power supply 2-15
Additional authorization list C-1
Alarm, COMSEC 2-38
Amplifier, power
  cabling 2-25
  weights and measures 1-5
Ancillary (other) operating procedures 4-1
  battery tray 4-26
  control-monitor (CM) 4-9
  ECCM fill device 4-13
  RCU 4-1
AN/GRA-39, operation with 4-16
Antenna (manpack)
  assembly 2-18
  positioning 2-18
  weights and measurements 1-5
Antenna (vehicular)
  positioning 2-28
  routine checks 5-17
  tiedown clamp/clip 2-28
  weights and measures 1-5
Appendixes A-1
AN/UGC-74 teletype, operation with 4-17
Assembly
  antenna tiedown clamp/clip 2-28
  antenna tip cap 2-28
  battery and battery box 2-16
  manpack antenna 2-18
  manpack radio 2-16
  RCU (Control, Receiver-Transmitter C-11561 (C)/U) 4-5
  vehicular radio 2-20

B

Bad weather, operation in 4-30
Battery, hold up (HUB)
  description C-1
  electrical condition (PMCS) 5-3
  emergency (dead RT hold up battery) 4-29
  removing and changing 2-32
Battery (primary)
  changing and removal 2-16
  checking and setting life condition 2-30

INDEX Continued

SUBJECT	PAGE
Battery (primary) - Continued	
description	C-1
electrical condition (PMCS)	5-3
installation	2-16
physical condition (PMCS)	5-3
warning	B
Battery Box	
installation	2-16
removal	2-16
weights and measurements	1-5
Battery tray procedures	4-26
mounting battery box on battery tray	4-26
checking battery life condition	4-26
Bringing another station into the net	3-14
C	
Cabling	
AN/GRA-39	4-16
control-monitor (CM)	4-9
Intercommunication Set AN/VIC-1 (V) (VIC system)	4-18
RCU	4-5
routine checks	5-17
voice/data	4-16
vehicular	2-24
Capabilities	1-4
Caution Labels and Plates	5-18
Changing hopset identification (ID)	3-15
Channel scanning	4-25
Characteristics, receiver-transmitter	1-4
Checks	
battery life condition	2-30
data rate	4-15
FH sync time	3-5
fill data in fill device	4-13
pre-mission	2-32
routine antenna	5-17
routine cable	5-17
routine controls and switches	5-17
routine mounting and assembly hardware	5-17
Cleaning	5-17
Clearing	
frequencies (SC)	2-34
single FH Set (FH data)	2-37
Cold start net opening procedures	
member	2-41
NCS	3-10

INDEX Continued

SUBJECT	PAGE
Common names, list of	E-1
Communication	
FH mode	2-35
SC mode	2-33
secure	2-39
troubleshooting	5-13
under unusual conditions	4-27
Components	
end item	B-1
location and description	1-7
manpack	1-7
Used with Radio Sets	1-14
vehicular	1-8
COMSEC alarm	2-38
COMSEC key, loading	2-38
Controls, indicators and connectors	
control-monitor (CM)	4-9
ECCM fill device	2-12
loudspeaker	2-11
mounting adapter	2-13
power amplifier mount	2-14
power supply adapter	2-15
RCU	4-2
receiver-transmitter	2-2
Control-monitor (CM)	
cabling	4-12
controls, description and use	4-9
display troubleshooting	5-16
function troubleshooting	5-15
initial setup and self-test	4-10
initial setup and self-test troubleshooting	5-14
input/output circuit troubleshooting	5-15
operation	4-10
RT function control PMCS	5-7
self-test PMCS	5-6
setting and changing RT functions	4-11
Control, Cryptographic Item	1-3
Control, Receiver-Transmitter C-11561(C)/U (RCU)	4-1
cabling (two-wire)	4-5
controls and indicators	4-2
ICM (intercom operation)	4-4
self-test	4-4
troubleshooting, RCU self-test and functioning	5-16
Cross-reference list, nomenclature	E-1
CUE procedures	2-45

D

Data rate, check/set	4-16
Data transmission, teletype	4-17

INDEX Continued

SUBJECT	PAGE
Description	
components	1-7
functional	1-15
general	1-15
use of operator's controls, indicators, and connectors	2-1
Dismounting RT	2-20
mounting RT	2-23
Display troubleshooting	5-14
E	
ECCM fill device	
checking for fill data	4-13
controls and indicators	2-12
loading fill device using another fill device	4-14
operations	4-13
zeroing data	4-13
Emergency procedures	
equipment damage	4-29
nuclear event	4-29
Equipment	
capabilities and features	1-4
characteristics	1-4
description and location	1-7
improvement recommendations (EIR)	1-3
major components used with radio sets	1-14
performance data	1-6
power output	1-6
transmission distance	1-6
weights and measurements	1-5
ERF	
FH update (member)	2-44
FH update (NCS)	3-13
late net entry (CUE and ERF)	2-46
part of cold start net opening procedure (member)	2-41
part of cold start net opening procedure (NCS)	3-10
retransmit (ERF Relay)	4-23
External equipment operation	
AN/GRA-39	4-17
Intercommunciation Set AN/VIC-1 (V) (VIC system)	4-18

INDEX Continued

SUBJECT PAGE

Teletype (AN/UGC-74) 4-17
Wire Line Adapter (HYX-57/TSEC) 4-20

F

Features 1-4
FH operating procedures 2-35
bringing another station into the net 3-14
changing hopset Identification (ID) 3-15
cold start net opening (member) 2-41
cold start net opening (NCS) 3-10
COMSEC, basic 2-38,2-39
CUE 2-45
ERF (cold start net opening) 2-41
late net entry 2-45,2-46
loading data (local fill)
COMSEC keys, TEK and KEK 2-38,2-39
CUE frequency, MAN frequency, SC frequency 2-33
FH data 2-36
FH sync time 3-5
hopsets 3-4
lockout sets 3-3
special instructions and notes (NCS) 3-8
update by ERF (member) 2-44
update by ERF (NCS) 3-13
FH sync time 3-5
checking 3-5
monitoring other net's 3-16
setting 3-5
Field pack 2-19
Fill device, ECCM; see ECCM fill device
Fording 4-30
Frequencies (SC)
clearing 2-34
clearing offset 2-34
loading.. 2-33
loading offset 2-34

INDEX Continued

SUBJECT PAGE

G

General information 1-2
Glossary E-3

H

Hand receipt (-HR) manuals 1-3
Handset
  connection 2-19
  troubleshooting 5-13
Hopset
  changing identification (ID) 3-15
  clearing a FH data 2-37
  local fill 2-36
How to bring another station into the net 3-14
How to use your manual vii

I

Indicators, receiver-transmitter front panel 2-2
Intercommunication Set AN/VIC-1 (V) (VIC system) 4-18
Installation; see assembly

J

Jamming, anti-jamming (operator) 2-47
Jamming, anti-jamming (NCS) 3-18
Julian date calendar A-2

K

KEK, loading 2-38
Keyboard functions
  RCU front panel 4-1
  RT front panel 2-2

L

Labels and plates 5-18
Late net entry 2-45,2-46
Lists
  abbreviations E-2
  common name E-1
  nomenclature E-1

INDEX Continued

SUBJECT PAGE

Loading
Cold start TSK 3-5
COMSEC key (TEK, KEK) 2-38
FH data 2-36
FH sync time 3-6
frequencies (SC) 2-33
off set frequencies 2-34
hopset (local fill) 3-4
lockout set (local fill) 3-3
Local fill
FH data 2-36
hopset 3-4
lockout set 3-3
TEK, KEK (COMSEC keys) 2-38
Loudspeaker 2-11

M

Maintenance forms, records and reports 1-2
Maintenance instructions 5-1
cleaning 5-17
operator 5-17
preventive checks and services 5-1
routine checks 5-17
Major components used with radio sets 1-14
Manpack radio
assembly 2-16
changing battery 2-16
controls 2-2
operation: see Operating procedures
Monitoring FH sync time of other nets 3-16
Mounting adapter controls, description and use of 2-13
Mounting and assembly hardware, routine checks of 5-17
Mounting dismount vehicular radio 2-23
Movement of equipment, preparation for
manpack radio 5-18
vehicular radio 5-18

N

NCS procedures 3-1
Net opening
cold start (member) 2-41
cold start (NCS) 3-10
Nomenclature cross-reference list E-1

INDEX Continued

SUBJECT PAGE

O

Offset frequencies, loading and clearing 2-34
Operating procedures
  anti-jamming and jamming (member) 2-47
  anti-jamming and jamming (NCS) 3-18
  COMSEC 2-38,2-39
  FH mode 2-35
  external equipment 4-15
  roadmaps and functional flow charts A-4
  RCU (Control, Receiver-Transmitter C-11561(C)/U 4-1
  retransmit 4-21
  SC mode 2-33
  troubleshooting (operator net) 2-51
  troubleshooting (NCS net) 3-20
Operation
  bad weather 4-30
  damaged equipment 4-29
  fording 4-30
  unusual conditions 4-27
Operator maintenance 5-17
Operator's controls, indicators, and connectors 2-1
Other operating procedures 4-1

P

Performance data 1-6
Power amplifier
  cabling 2-25,2-27
  weights and measurements 1-5
Power amplifier mount 2-14
Power output 1-6
Power supply adapter 2-15
Power source, troubleshooting radio 5-10
Pre-mission check 2-32,2-40
Preparation for movement, manpack and vehicular 5-18
Preventive maintenance checks and services (PMCS) 5-1
  battery electrical condition 5-3
  battery electrical condition (HUB) 5-3
  battery physical condition 5-3
  cables 5-8
  control-monitor RT function control 5-7
  control-monitor self-test 5-6
  mounting adapter and mounting base (or power supply adapter and
    single radio mount 5-5
  receiver-transmitter self-test 5-4
  remote operation 5-6
  table 5-2
  transmitter 5-5
Principles of operation, technical 1-15

INDEX Continued

SUBJECT PAGE

Q

R

Radio
self-test troubleshooting of 5-10
power source troubleshooting of 5-10
Radios, components of 1-7
Range 1-6
RCU (Control, Receiver-Transmitter C-11561(C)/U)
controls and indicators 4-2
ICM operation 4-4
operational notes 4-3
self-test 4-4
troubleshooting, self-test and functioning 5-16
Receiver-transmitter (RT)
cabling 2-24
connectors 2-8
installing in field pack 2-19
installing in mounting adapter (or power supply adapter) 2-23
maintenance 5-17
operating controls, indicators, and connectors 2-1
performancedata 1-6
PMCS, self-test 5-4
troubleshooting 5-10
weights and measurements 1-5
Reference data E-1
abbreviations E-2
glossary E-3
Julian date calendar A-2
nomenclature cross-reference E-1
reference publications A-1
time zone map A-3
Remote fill of COMSEC keys 3-16
Remote operation, PMCS 5-6
Reporting equipment improvement recommendations (EIR) 1-3
Retransmit operation 4-21
SC to SC 4-21
FH to FH 4-22
SC to FH 4-22
ERF relay 4-23
Roadmaps and functional flow charts, operator's A-4
Routine checks 5-17

INDEX Continued

SUBJECT PAGE

S

Scanning, channel 4-25
SC operating procedures 2-33
loading and clearing frequencies 2-33
loading and clearing offset frequencies 2-34
scanning 4-25
Scrolling TEK 2-39
Security and classification 1-3
Secure communication 2-39
Self-test
Control, Receiver-Transmitter C-11561(C)/U (RCU) 4-4
receiver-transmitter PMCS 5-4
receiver-transmitter troubleshooting 5-10
Setting and changing RT functions using control-monitor (CM) 4-11
Setting data rate 4-15
Sidetone troubleshooting 5-12
Signal display troubleshooting 5-12
Signal display 2-5
Specifications, radio sets AN/PRC-1 19A and AN/VRC-87A thru
AN/VRC-92A, and AN/VRC-87C and AN/VRC-88C 1-6

T

Table of contents ii
Technical principles of operation 1-15
TEK, loading, local fill 2-38
TEK, scrolling 2-39
Teletype (AN/UGC-74) operation 4-17
Time zone map A-3
Transmission distance 1-6
Transmitter PMCS 5-5
Troubleshooting procedures 5-9
communication 5-13
control-monitor displays 5-16
control-monitor initial setup and self-test 5-14
control-monitor input/output circuit 5-15
display 5-14
handset 5-13
member, net operation 2-51
NCS, net operation 3-20

INDEX Continued

SUBJECT	PAGE
Troubleshooting procedures - Continued	
radio power source	5-11
radio self-test	5-11
RCU self-test and functioning	5-16
sidetone	5-12
signal display	5-12
table	5-10

U

Updating FH data by using ERF (member)	2-44
Updating FH data by using ERF (NCS)	3-13
Use of operator's controls, indicators and connectors	2-1

V

Variable, COMSEC key (TEK, KEK)	2-38
Vehicular radio	
antenna	2-28
assembly	2-20
cabling	2-24
dismounting	2-20
mounting	2-23
preparation for movement	5-18
VIC system, Intercommunication Set AN/VIC-1 (V)	4-18

W

Warnings	
electrical shock	A
high voltage	A
labels and plates	5-18
lithium battery	B
Weather, operation in bad	4-29
Weights and measurements	1-5

INDEX Continued

SUBJECT PAGE

X

V

Z

Zeroing
COMSEC keys 2-3
FH data 2-3
fill device data 4-13

RECOMMENDED CHANGES TO EQUIPMENT TECHNICAL PUBLICATIONS

SOMETHING WRONG WITH THIS PUBLICATION

FROM: (PRINT YOUR UNIT'S COMPLETE ADDRESS)
Commander
Stateside Army Depot
ATTN: AMSTA-US
Stateside, N.J. 07703-5007

DATE SENT
10 July 1975

PUBLICATION NUMBER	PUBLICATION DATE	PUBLICATION TITLE
TM 11-5840-340-12	23 Jan 74	Radar Set AN/PRC-76

BE EXACT PIN-POINT WHERE IT IS

PAGE NO	PARA-GRAPH	FIG-URE NO	TABLE NO	IN THIS SPACE TELL WHAT IS WRONG AND WHAT SHOULD BE DONE ABOUT IT:
2-25	2-28			Recommend that the installation antenna alignment procedure be changed throughout to specify a 2° IFF antenna lag rather than 1°. REASON: Experience has shown that with only a 1° lag, the antenna servo system is too sensitive to wind gusting in excess of 25 knots, and has a tendency to rapidly accelerate and decelerate as it hunts, causing strain to the drive train. Hunting is minimized by adjusting the lag to 2° without degradation of operation.
3-16	3-3		3-1	Item 5, Function Column. Change "2 dB" to "3 dB". REASON: The adjustment procedure for the TRANS POWER FAULT indicator calls for a 3 dB (500 watts) adjustment to light the TRANS POWER FAULT indicator.
5-6	5-8			Add new step f.1 to read, "Replace cover plate removed in step e.1, above." REASON: To replace the cover plate.
		FO-3		Zone C 3. On J1-2, change "+24 VDC" to "+5 VDC". REASON: This is the output line of the 5 VDC power supply. +24 VDC is the input voltage.

PRINTED NAME, GRADE/TITLE AND TELEPHONE NUMBER	SIGN HERE
SSG I. M. DeSpiritof 999-1776	I. M. DeSpiritof

DA FORM 1 JUL 79 2028-2 PREVIOUS EDITIONS ARE OBSOLETE

P.S. - IF YOUR OUTFIT WANTS TO KNOW ABOUT YOUR RECOMMENDATION MAKE A CARBON COPY OF THIS AND GIVE IT TO YOUR HEADQUARTERS.

TEAR ALONG DOTTED LINE

SAMPLE

REVERSE OF DA FORM 2028-2

TEAR ALONG PERFORATED LINE

FILL IN YOUR UNIT'S ADDRESS

FOLD BACK

DEPARTMENT OF THE ARMY

OFFICIAL BUSINESS

NO POSTAGE NECESSARY IF MAILED IN THE UNITED STATES

BUSINESS REPLY MAIL

FIRST CLASS MAIL PERMIT NO. 144 RED BANK NJ

POSTAGE WILL BE PAID BY

Commander
US Army Communications-Electronics Command
and Fort Monmouth
ATTN: AMSEL-LC-[illegible]
Fort Monmouth, New Jersey 07703-5007

SAMPLE

FOLD BACK

RECOMMENDED CHANGES TO EQUIPMENT TECHNICAL PUBLICATIONS

SOMETHING WRONG WITH THIS PUBLICATION

THEN ... JOT DOWN THE DOPE ABOUT IT ON THIS FORM. CAREFULLY TEAR IT OUT. FOLD IT AND DROP IT IN THE MAIL.

FROM: (PRINT YOUR UNIT'S COMPLETE ADDRESS)

DATE SENT

PUBLICATION NUMBER	PUBLICATION DATE	PUBLICATION TITLE
TM 11-5820-890-10-1		OPERATOR'S MANUAL; SINCGARS GROUND COMBAT NET RADIO, ICOM

BE EXACT PIN-POINT WHERE IT IS

PAGE NO	PARA-GRAPH	FIGURE NO	TABLE NO

IN THIS SPACE TELL WHAT IS WRONG AND WHAT SHOULD BE DONE ABOUT IT:

PRINTED NAME, GRADE/TITLE AND TELEPHONE NUMBER

SIGN HERE

DA FORM 1 JUL 79 2028-2

PREVIOUS EDTIONS ARE OBSOLETE

P.S. - IF YOUR OUTFIT WANTS TO KNOW ABOUT YOUR RECOMMENDATION MAKE A CARBON COPY OF THIS AND GIVE IT TO YOUR HEADQUARTERS.

TEAR ALONG DOTTED LINE

REVERSE OF DA FORM 2028-2

TEAR ALONG PERFORATED LINE

FILL IN YOUR UNIT'S ADDRESS

FOLD BACK

DEPARTMENT OF THE ARMY

OFFICIAL BUSINESS

Commander
US Army Communications-Electronics Command
and Fort Monmouth
ATTN: AMSEL-LC-LM-LT
Fort Monmouth, New Jersey 07703-5007

FOLD BACK

RECOMMENDED CHANGES TO EQUIPMENT TECHNICAL PUBLICATIONS

SOMETHING WRONG WITH THIS PUBLICATION

THEN ... JOT DOWN THE DOPE ABOUT IT ON THIS FORM. CAREFULLY TEAR IT OUT. FOLD IT AND DROP IT IN THE MAIL.

FROM: (PRINT YOUR UNIT'S COMPLETE ADDRESS)

DATE SENT

PUBLICATION NUMBER	PUBLICATION DATE	PUBLICATION TITLE
TM 11-5820-890-10-1		OPERATOR'S MANUAL; SINCGARS GROUND COMBAT NET RADIO, ICOM

BE EXACT PIN-POINT WHERE IT IS

PAGE NO	PARA-GRAPH	FIGURE NO	TABLE NO

IN THIS SPACE TELL WHAT IS WRONG AND WHAT SHOULD BE DONE ABOUT IT:

PRINTED NAME, GRADE/TITLE AND TELEPHONE NUMBER

SIGN HERE

DA FORM 1 JUL 79 2028-2

PREVIOUS EDTIONS ARE OBSOLETE

P.S. - IF YOUR OUTFIT WANTS TO KNOW ABOUT YOUR RECOMMENDATION MAKE A CARBON COPY OF THIS AND GIVE IT TO YOUR HEADQUARTERS.

TEAR ALONG DOTTED LINE

REVERSE OF DA FORM 2028-2

TEAR ALONG PERFORATED LINE

FILL IN YOUR UNIT'S ADDRESS

FOLD BACK

DEPARTMENT OF THE ARMY

OFFICIAL BUSINESS

Commander
US Army Communications-Electronics Command
and Fort Monmouth
ATTN: AMSEL-LC-LM-LT
Fort Monmouth, New Jersey 07703-5007

FOLD BACK

RECOMMENDED CHANGES TO EQUIPMENT TECHNICAL PUBLICATIONS

SOMETHING WRONG WITH THIS PUBLICATION

THEN ... JOT DOWN THE DOPE ABOUT IT ON THIS FORM. CAREFULLY TEAR IT OUT. FOLD IT AND DROP IT IN THE MAIL.

FROM: (PRINT YOUR UNIT'S COMPLETE ADDRESS)

DATE SENT

PUBLICATION NUMBER	PUBLICATION DATE	PUBLICATION TITLE
TM 11-5820-890-10-1		OPERATOR'S MANUAL; SINCGARS GROUND COMBAT NET RADIO, ICOM

BE EXACT PIN-POINT WHERE IT IS

PAGE NO	PARA-GRAPH	FIGURE NO	TABLE NO

IN THIS SPACE TELL WHAT IS WRONG AND WHAT SHOULD BE DONE ABOUT IT:

PRINTED NAME, GRADE/TITLE AND TELEPHONE NUMBER

SIGN HERE

DA FORM 1 JUL 79 2028-2

PREVIOUS EDTIONS ARE OBSOLETE

P.S. - IF YOUR OUTFIT WANTS TO KNOW ABOUT YOUR RECOMMENDATION MAKE A CARBON COPY OF THIS AND GIVE IT TO YOUR HEADQUARTERS.

TEAR ALONG DOTTED LINE

REVERSE OF DA FORM 2028-2

TEAR ALONG PERFORATED LINE

FILL IN YOUR UNIT'S ADDRESS

FOLD BACK

DEPARTMENT OF THE ARMY

OFFICIAL BUSINESS

Commander
US Army Communications-Electronics Command
and Fort Monmouth
ATTN: AMSEL-LC-LM-LT
Fort Monmouth, New Jersey 07703-5007

FOLD BACK

RECOMMENDED CHANGES TO EQUIPMENT TECHNICAL PUBLICATIONS

SOMETHING WRONG WITH THIS PUBLICATION

THEN ... JOT DOWN THE DOPE ABOUT IT ON THIS FORM. CAREFULLY TEAR IT OUT. FOLD IT AND DROP IT IN THE MAIL.

FROM: (PRINT YOUR UNIT'S COMPLETE ADDRESS)

DATE SENT

PUBLICATION NUMBER	PUBLICATION DATE	PUBLICATION TITLE
TM 11-5820-890-10-1		OPERATOR'S MANUAL; SINCGARS GROUND COMBAT NET RADIO, ICOM

BE EXACT PIN-POINT WHERE IT IS

PAGE NO	PARA-GRAPH	FIGURE NO	TABLE NO

IN THIS SPACE TELL WHAT IS WRONG AND WHAT SHOULD BE DONE ABOUT IT:

PRINTED NAME, GRADE/TITLE AND TELEPHONE NUMBER

SIGN HERE

DA FORM 1 JUL 70 2028-2

PREVIOUS EDTIONS ARE OBSOLETE

P.S. - IF YOUR OUTFIT WANTS TO KNOW ABOUT YOUR RECOMMENDATION MAKE A CARBON COPY OF THIS AND GIVE IT TO YOUR HEADQUARTERS.

TEAR ALONG DOTTED LINE

REVERSE OF DA FORM 2028-2

FILL IN YOUR UNIT'S ADDRESS

FOLD BACK

DEPARTMENT OF THE ARMY

OFFICIAL BUSINESS

Commander
US Army Communications-Electronics Command
and Fort Monmouth
ATTN: AMSEL-LC-LM-LT
Fort Monmouth, New Jersey 07703-5007

FOLD BACK

TEAR ALONG PERFORATED LINE

By Order of the Secretary of the Army:

GORDON R. SULLIVAN
General, United States Army
Chief of Staff

Official:

MILTON H. HAMILTON
Administrative Assistant to the
Secretary of the Army
02010

DISTRIBUTION:

To be distributed in accordance with DA Form 12-51-E, block 1755, Operator Maintenance requirements for TM 11-5820-890-10-1.

☆U.S. GOVERNMENT PRINTING OFFICE: 1994 300-769/12207

EMERGENCY PROCEDURES PAGE 4-27

OPERATOR'S INSTRUCTIONS PAGE 2-1

PMCS PAGE 5-1

OPERATOR MAINTENANCE PAGE 5-17

ASSEMBLY PAGE 2-16

OTHER OPERATION PAGE 4-1

SC PROCEDURES PAGE 2-33

OPERATOR FH PROCEDURES PAGE 2-35

NCS PROCEDURES PAGE 3-1

CONTROL, RECEIVER-TRANSMITTER C-11561(C)/U PAGE 4-1

ROADMAP, FLOW CHARTS PAGE A-4

GLOSSARY PAGE E-5

PIN: 064247-000